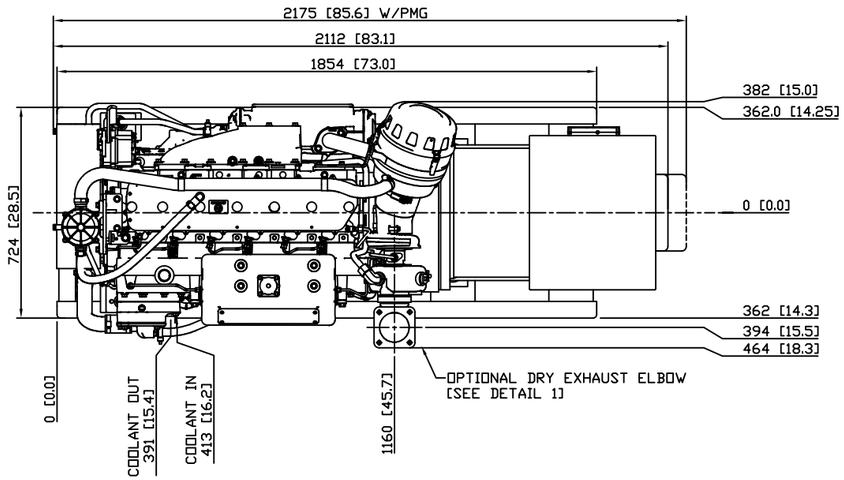

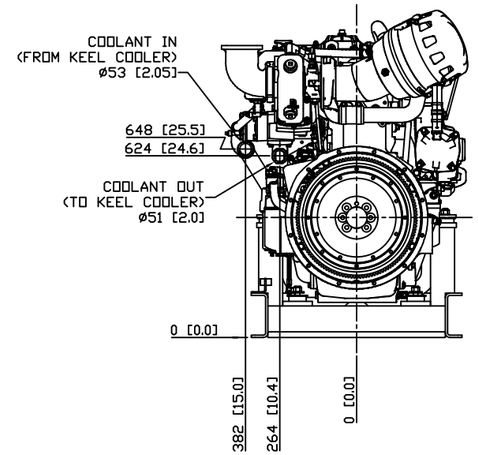

DETAIL 2
KEEL COOLER CONNECTIONS

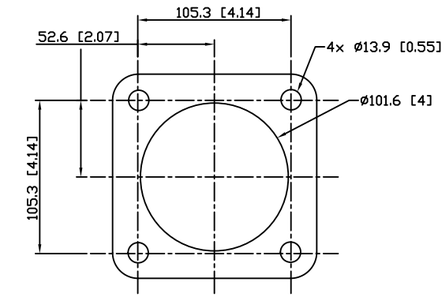

DETAIL 1
OPTIONAL DRY EXHAUST FLANGE
SCALE: 1:2

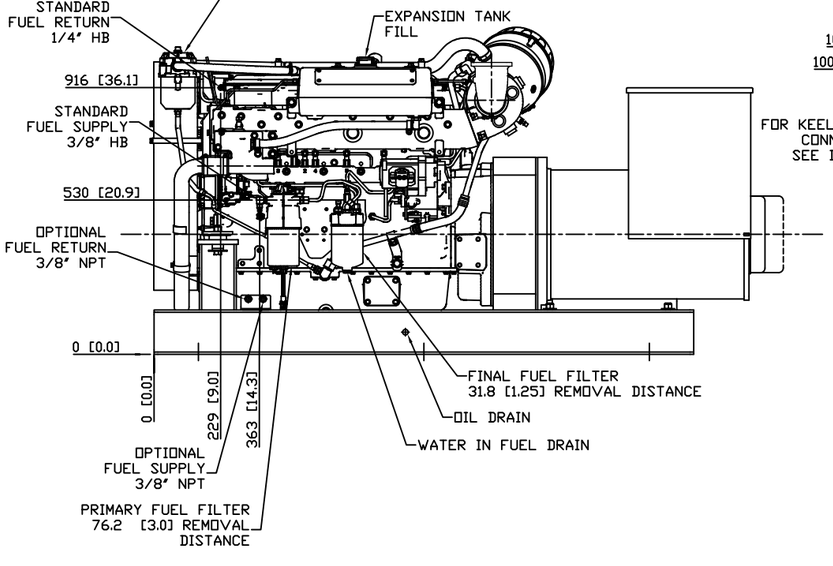

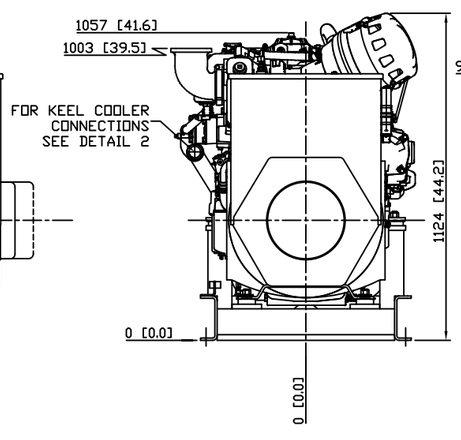

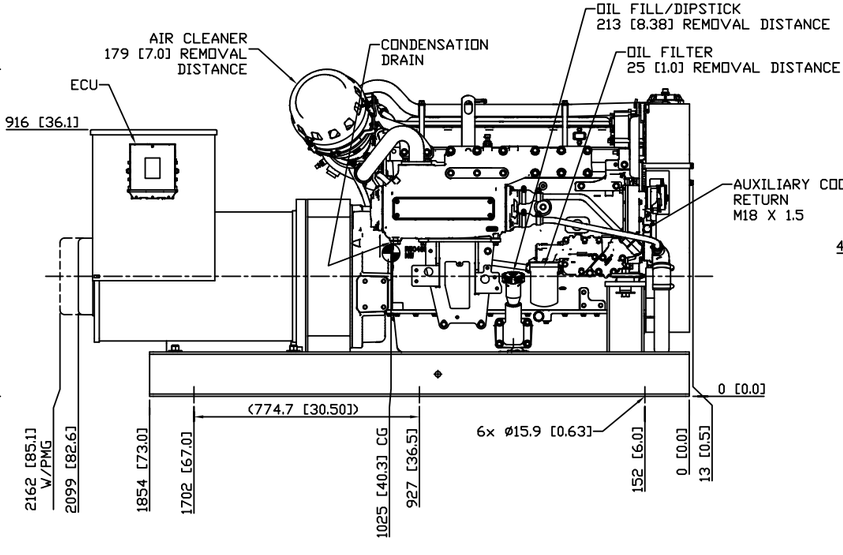

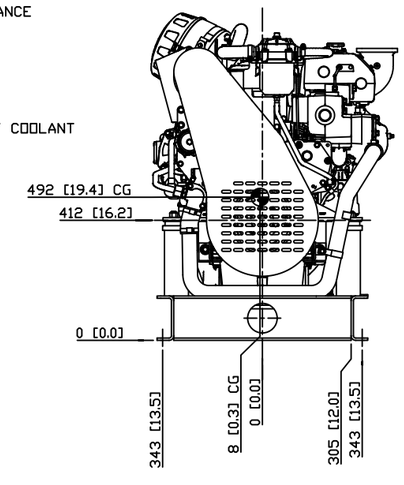

NOTES
1. APPROX. WEIGHT, DRY: 1610 KG [3550 LBS.]
2. THE DIMENSIONS ON THIS DRAWING ARE SUBJECT TO CHANGE. PLEASE CONTACT NLI TO BE SURE YOU HAVE THE MOST CURRENT VERSION.

THIRD ANGLE PROJECTION

PROPRIETARY AND CONFIDENTIAL
THE INFORMATION CONTAINED IN THIS DRAWING IS THE SOLE PROPERTY OF NORTHERN LIGHTS. ANY REPRODUCTION IN PART OR AS A WHOLE WITHOUT THE WRITTEN PERMISSION OF NORTHERN LIGHTS IS PROHIBITED.

UNLESS OTHERWISE SPECIFIED:
DIMENSIONS ARE IN MILLIMETERS
TOLERANCES:
ANGULAR:
MACH ± 0.5° BEND ± 1.0°
X. ± 0.2
XX ± 0.13
INTERPRET GEOMETRIC TOLERANCING PER: ASME Y14.5M
MATERIAL
FINISH
DO NOT SCALE

	NAME	DATE
DRAWN	MG	09/26/17
CHECKED	TAH	10/30/17
ENG APPR.		
MFG APPR.		
Q.A.		

COMMENTS:

NORTHERN LIGHTS
4420 14th AVE. N.W.
Seattle, WA 98107
(206) 789-3880
www.northern-lights.com

TITLE:
INSTALLATION DRAWING
M150C13 / UC1274 - KEEL COOLED

SIZE	PART NO.	DWG. NO.	REV
D		D-5049	

SCALE: 1:10 | WEIGHT: | SHEET 1 OF 1

REV D D-5049