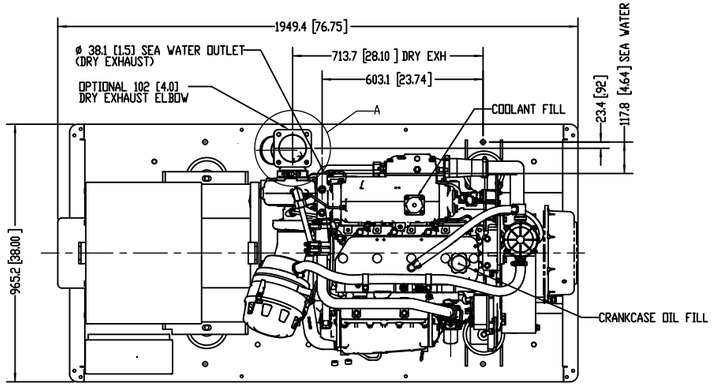

PLAN VIEW

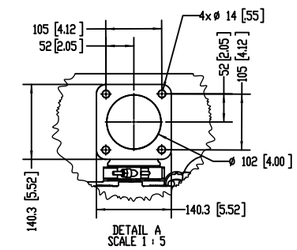

OPTIONAL DRY EXHAUST ELBOW FLANGE DETAIL

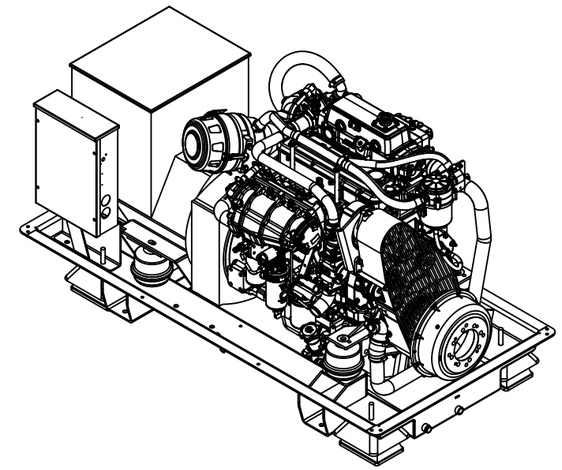

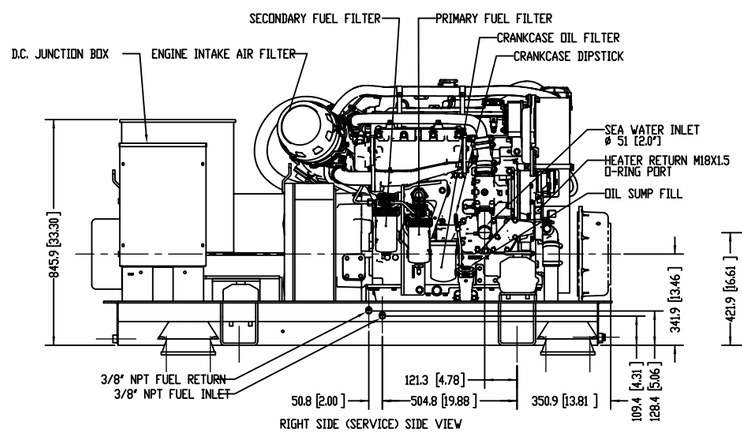

RIGHT SIDE (SERVICE) SIDE VIEW

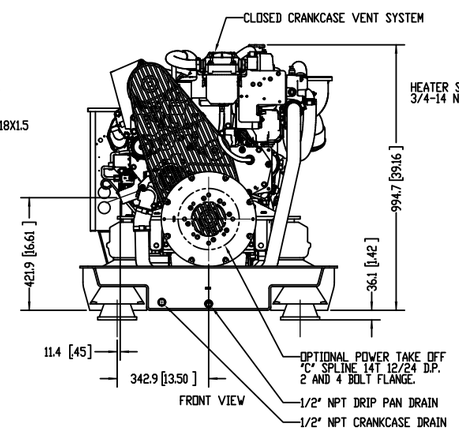

FRONT VIEW

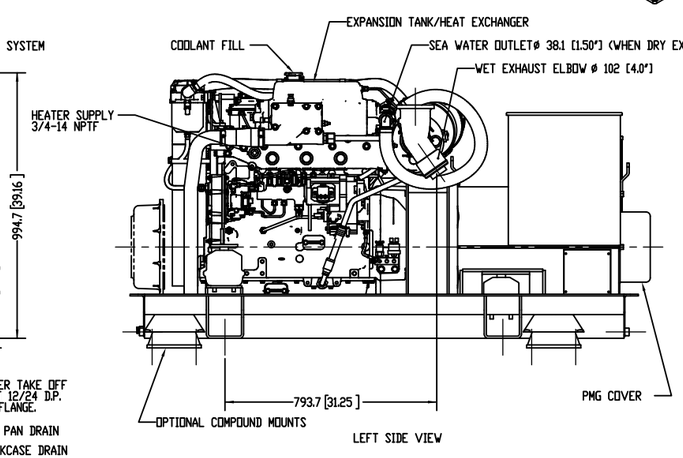

LEFT SIDE VIEW

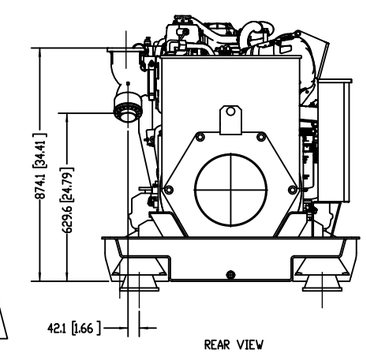

REAR VIEW

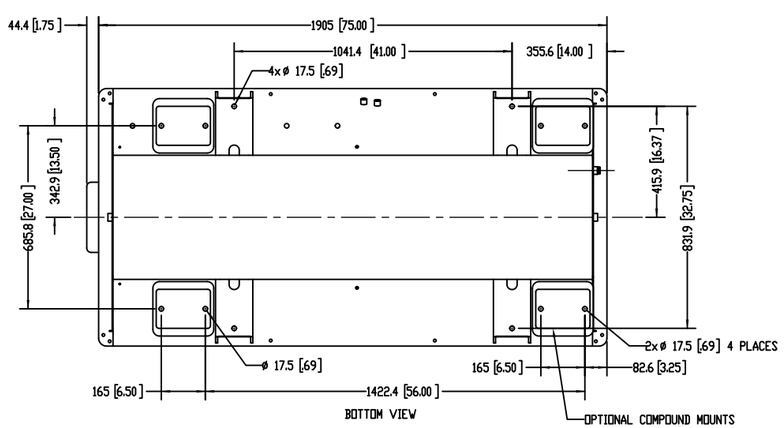

BOTTOM VIEW

MODELS	APPROX WT. kg [lbs.]
M80A13.1SL	1247 [2749.4]
M80A13.3SL	1247 [2749.4]
M80A13.5SL	1247 [2749.4]
M99A13.1SL	1247 [2749.4]

WEIGHT INCLUDES OIL AND COOLANT

THE DIMENSIONS ON THIS DRAWING ARE SUBJECT TO CHANGE. PLEASE CONTACT NORTHERN LIGHTS INC TO BE SURE YOU HAVE THE MOST CURRENT VERSION.

THIRD ANGLE PROJECTION

PROPRIETARY AND CONFIDENTIAL
THE INFORMATION CONTAINED IN THIS DRAWING IS THE SOLE PROPERTY OF NORTHERN LIGHTS. ANY REPRODUCTION IN PART OR AS A WHOLE WITHOUT THE WRITTEN PERMISSION OF NORTHERN LIGHTS IS PROHIBITED.

UNLESS OTHERWISE SPECIFIED:
DIMENSIONS ARE IN MILLIMETERS
TOLERANCES:
ANGLE ±
MACH ± 0.5° BEND ± 1.0°
.X ± 0.5
.XX ± 0.3
INTERPRET GEOMETRIC TOLERANCING PER: ASME Y14.5M
MATERIAL
FINISH
DO NOT SCALE

	NAME	DATE
DRAWN	LTP	5/12/2025
CHECKED	-	-
ENG APPR.		
MFG APPR.		
Q.A.		

COMMENTS:

NORTHERN LIGHTS
4420 14th AVE. N.W.
Seattle, WA 98107
(206) 789-3880
www.northern-lights.com

TITLE:
GENSET INSTALLATION DIMENSIONS
M80A/M99/STAMFORD UCM274E

SIZE	PART NO.	DWG. NO.	REV
D	SEE TABLE	D-5476	

SCALE: 1:10 | WEIGHT: SEE TABLE | SHEET 1 OF 1

REV	
D	D-5476