MODELS	EST. WEIGHT*	C.G.		
		"X"	"Y"	"Z"
M65T13SL	2695 LBS [1222 kg]	424[16.69]	-416[16.37]	383[15.08]
M55T13SL				
M50T13SL				
OPTIONAL PTO	158 LBS [70 kg]	-226[8.90]	-416[16.37]	341[13.43]
OPTIONAL COMPOUND MOUNTS	70 LBS [32 kg]	521[20.51]	-416[16.37]	28[1.10]

*WITH OIL, NO COOLANT

ITEM	DESCRIPTION
1	EXPANSION TANK
2	COOLANT FILL
3	OPTIONAL WET EXHAUST Ø 4 H.B.
4	D.C. JUNCTION BOX
5	FUEL INLET - 3/8 NPT
6	FUEL RETURN - 3/8 NPT
7	CRANKCASE OIL DIPSTICK
8	CRANKCASE OIL FILLER
9	CRANKCASE OIL FILTER
10	ENGINE OIL DRAIN - 1/2 NPT
11	AIR INLET FILTER
12	OPTIONAL DRY EXHAUST ELBOW - SEE DETAIL
13	CLOSED CRANKCASE VENTILATION SYSTEM
14	ELECTRIC STARTER
15	PRIMARY FUEL FILTER
16	FINAL FUEL FILTER
17	ENGINE CONTROL UNIT
18	SEAWATER INLET - Ø 1-1/4 H.B.
19	SEAWATER OUTLET - Ø 1-1/2 H.B. (DRY EXHAUST)

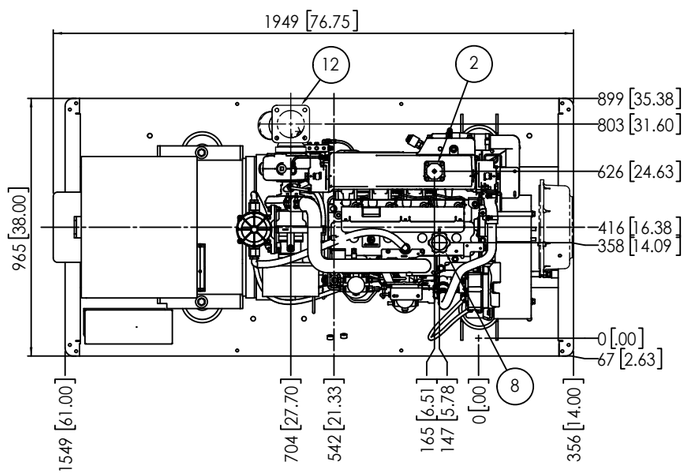

PLAN

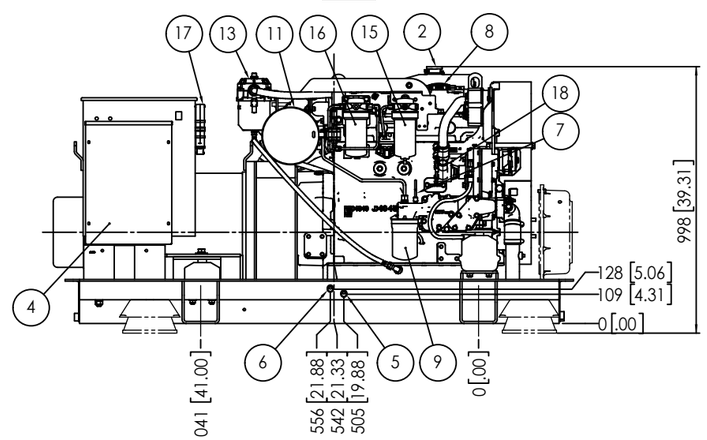

SERVICE SIDE

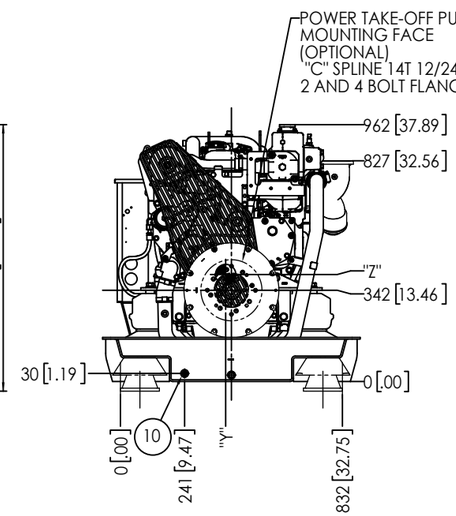

FRONT

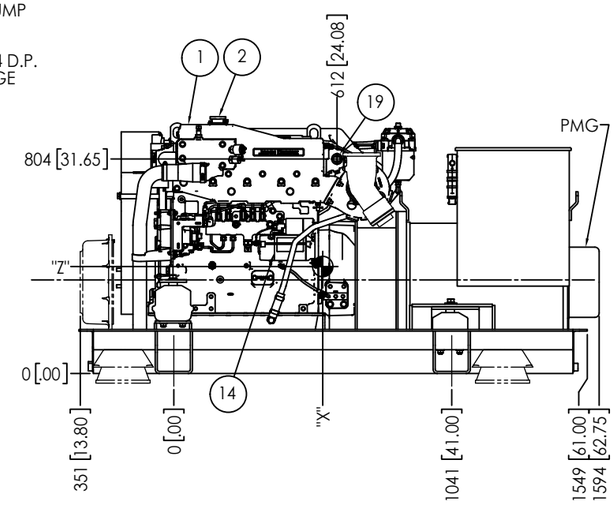

NON-SERVICE SIDE

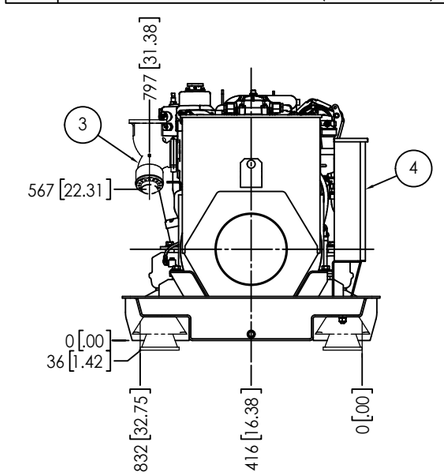

REAR

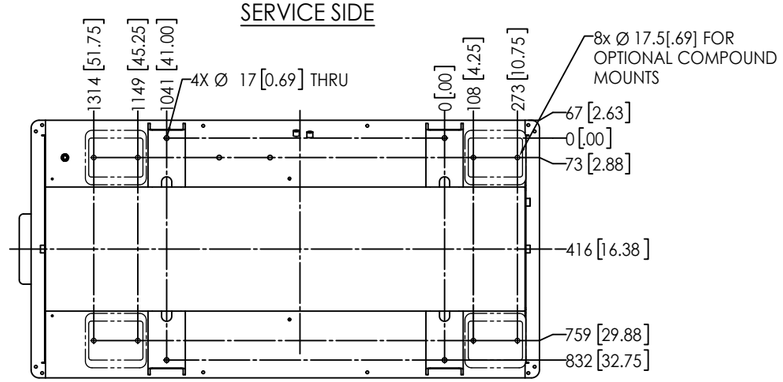

BOTTOM

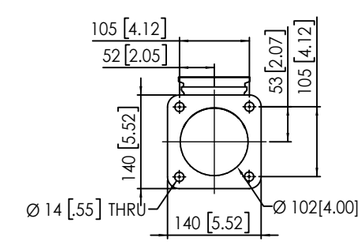

OPTIONAL DRY EXHAUST ELBOW FLANGE DETAIL

THE DIMENSIONS ON THIS DRAWING ARE SUBJECT TO CHANGE. PLEASE CONTACT NLI TO BE SURE YOU HAVE THE MOST CURRENT REVISION.

THIRD ANGLE PROJECTION

PROPRIETARY AND CONFIDENTIAL
THE INFORMATION CONTAINED IN THIS DRAWING IS THE SOLE PROPERTY OF NORTHERN LIGHTS. ANY REPRODUCTION IN PART OR AS A WHOLE WITHOUT THE WRITTEN PERMISSION OF NORTHERN LIGHTS IS PROHIBITED.

UNLESS OTHERWISE SPECIFIED:
DIMENSIONS ARE IN MILLIMETERS
TOLERANCES:
ANGULAR:
MACH ± 0.5° BEND ± 1.0°
X. ± 2
X.X ±1
INTERPRET GEOMETRIC TOLERANCING PER: ASME Y14.5M
MATERIAL
FINISH
DO NOT SCALE

	NAME	DATE
DRAWN	MG	02/20/23
CHECKED	LTP	02/24/23
ENG APPR.		
MFG APPR.		
Q.A.		

COMMENTS:

NORTHERN LIGHTS
4420 14th AVE. N.W.
Seattle, WA 98107
(206) 789-3880
www. northern-lights.com

TITLE: INSTALLATION DIMENSIONS
M65T13SL/M50T13SL HEAT EXCHANGED

SIZE	PART NO.	DWG. NO.	REV
D	SEE TABLE	D-5522	-

SCALE: 1:10 WEIGHT: SHEET 1 OF 1

D-5522