PARTS MANUAL

P65-3

For Models: M50C13, M55C13, M50T13,
M65C13 & M65T13

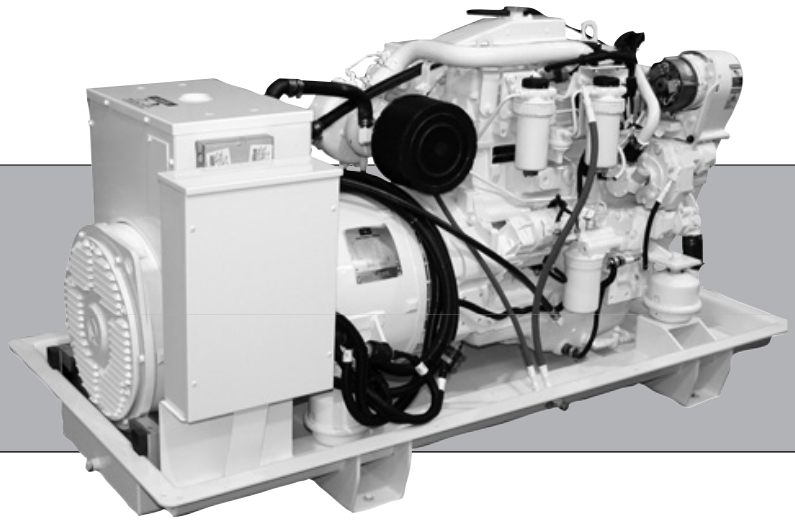

NORTHERN LIGHTS®

www.northern-lights.com

— CALIFORNIA —

Proposition 65 Warning:

Breathing Diesel engine exhaust and some of its constituents are known to the State of California to cause cancer, birth defects, and other reproductive harm.

* Always start and operate the engine in a well-ventilated area.
* If in an enclosed area, vent the exhaust to the outside.
* Do not modify or tamper with the exhaust system.
* Do not idle the engine except as necessary.

For more information, go to www.P65warnings.ca.gov/diesel.

Northern Lights
4420 14th Avenue NW
Seattle, WA 98107
Tel: (206) 789-3880
Fax: (206) 782-5455

Copyright ©2023 Northern Lights, Inc.
All rights reserved. Northern Lights™, and the Northern Lights logo are trademarks of Northern Lights, Inc.

Printed in U.S.A.
PART NO.: P65-3 12/23

PARTS CATALOG

for Models

M50C13, M55C13, M50T13, M65C13 & M65T13

Please read thoroughly before attempting to use this manual:

Table of Content I
Model Designation & Serial Numbers II

Table of Contents

GROUP 1 - ENGINE
- Cylinder Block ..... 0 - 1
- Flywheel Housing & Flywheel ..... 2 - 3
- Crankshaft & Main Bearings & Pulley ..... 4 - 5
- Connecting Rods and Pistons ..... 6 - 7
- Balancer Shaft & Front Plate ..... 8 - 9
- Timing Gear Cover & Coolant Pump ..... 10 - 11
- Auxiliary Drive ..... 12 - 15
- Oil Filter ..... 16 - 17
- Dipsticks ..... 18 - 20
- Oil Filter Neck 21
- Oil Pump, Drain & Pan ..... 22 - 25
- Cylinder Head with Valves ..... 26 - 27
- Rocker Cover, Shaft & Cam ..... 28 - 29
- Valve Cover ..... 30 - 31

GROUP 2 - INTAKE & EXHAUST
- Crankcase Breather Filter ..... 0 - 1
- Ventilating System 2
- Air Intake 3
- Exhaust Manifold ..... 4 - 5
- Turbocharger ..... 6 - 7
- Exhaust Elbow ..... 8 - 9

GROUP 3 - COOLING SYSTEM
- Heat Exchanger ..... 0 - 1
- Heat Exchanger, Keel Cooling ..... 2 - 3
- Heat Exchanger Hose Assembly ..... 4 - 5
- Thermostat & Thermostat Cover ..... 6 - 7
- Coolant Pump Inlet & Pulley ..... 8 - 9
- Raw Water Pump & Assembly ..... 10 - 11
- Oil Cooler 12
- Thermostat Housing & Bypass ..... 14 - 15

GROUP 4 - FUEL SYSTEM
- Fuel Injection Pump & Fuel Lines 0- 3
- Fuel Filter/Water Separator 4
- Low Pressure Fuel Lines 5
- Fuel Filter Assembly & Lines ..... 6 -8
- Fuel Transfer Pump 9

GROUP 5 - ELECTRICAL SYSTEM
- 12 & 24 Volt, Standard & Isolated Ground ..... 0 - 11
- Engine Wiring Harness ..... 12 - 13
- Oil Pressure Manifold 14
- Pre-Alarm Switches 15
- Starter 16
- Alternator & Mounting ..... 17 - 23
- DC Electrical Enclosure & Relay Panel ..... 24 - 25
- Relay Logic Board 26
- Control Panels ..... 27 - 28
- Voltage Protector 29
- Belt Tensioner 30
- Belt Guard & Kit ..... 31 - 33
- Engine Sensors ..... 34 - 35
- Immersion Block Heater ..... 36 - 37
- Starter Relay ..... 38 - 41

GROUP 6 - GASKETS
- Engine Overhaul 0

GROUP 8 - FRAMES & MOUNTING
- Base Frames ..... 0 -3

GROUP 9 - ACCESSORIES & OPTIONAL EQUIPMENT
- PTO Electric Clutch 0- 1
- PTO Adapter 2- 3
- Electric Clutch ..... 4 - 7
- Low Oil Level Switch 8
- Low Coolant Level Switch 9
- Raw Water Flow Switch ..... 10 - 13

Proprietary Information

This publication is the property of Northern Lights, Inc.

It may not be reproduced in whole or in part without the written permission of Northern Lights, Inc.

© Northern Lights, Inc. All rights reserved. Litho U.S.A. Publication number P65-3

MODEL DESIGNATION

M 50 C13	=	Northern Lights Tier III marine diesel generator set with a John Deere 4045 engine, 50 kW.
M 50 T13	=	Northern Lights Tier III turbocharged marine diesel generator set with a John Deere 4045 engine, 50 kW.
M 55 C13	=	Northern Lights Tier III marine diesel generator set with a John Deere 4045 engine, 55 kW.
M 65 C13	=	Northern Lights Tier III marine diesel generator set with a John Deere 4045 engine, 65 kW.
M 65 T13	=	Northern Lights Tier III turbocharged marine diesel generator set with a John Deere 4045 engine, 65 kW.

All model numbers in parentheses will indicate a John Deere base engine. All variations requiring serial numbers for proper identification will be noted as Northern Lights or John Deere.

SERIAL NUMBERS

NORTHERN LIGHTS

Your set has three serial numbers: ① an engine number stamped on the block, ② a generator plate, and ③ a generator set plate. Use the serial number on the **generator set plate** when ordering parts or in correspondence. The generator set plate is found on the service side of the generator and resembles one of the drawings below.

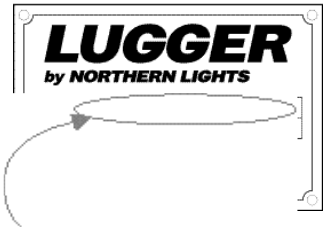

Lugger Serial Number

Number

Generator Set Serial Number

Reading a Parts Page

IMPORTANT:

Before selecting parts, be sure that you are choosing parts from the correct page.
Check the model designation at the page top.
Do not use this illustration for parts purchasing.

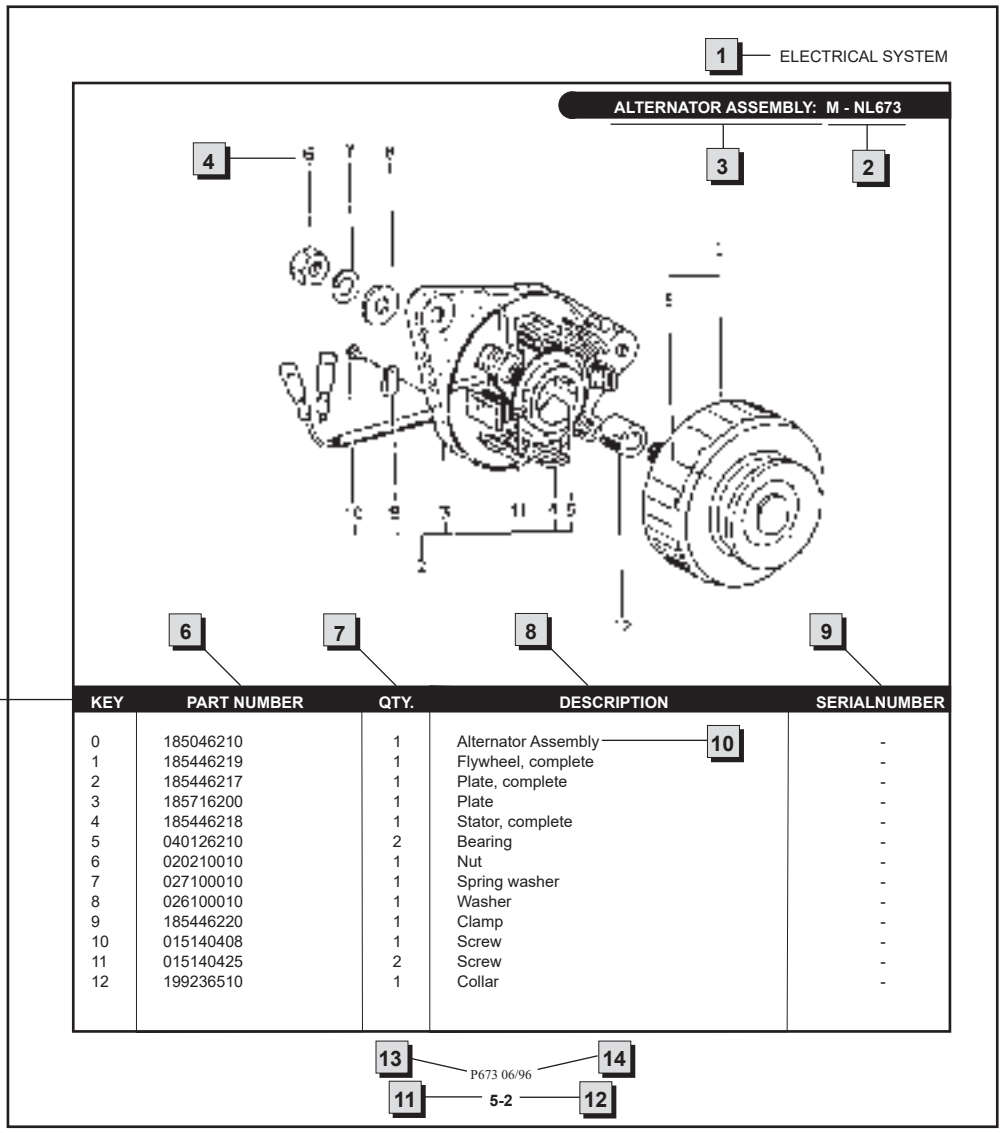

KEY	PART NUMBER	QTY.	DESCRIPTION	SERIALNUMBER
0	185046210	1	Alternator Assembly	-
1	185446219	1	Flywheel, complete	-
2	185446217	1	Plate, complete	-
3	185716200	1	Plate	-
4	185446218	1	Stator, complete	-
5	040126210	2	Bearing	-
6	020210010	1	Nut	-
7	027100010	1	Spring washer	-
8	026100010	1	Washer	-
9	185446220	1	Clamp	-
10	015140408	1	Screw	-
11	015140425	2	Screw	-
12	199236510	1	Collar	-

REFERENCES:

1. Grouping section title.
2. Model designation of equipment that uses parts listed on this page.
3. Title and description of assembly.
4. Drawing numbers that correspond to key column numbers for parts identification.
5. Key column for locating parts shown on drawing.
6. Part number.
7. Quantity of parts used.
8. Description of each component part.
9. Serial number of unit the part fits.
10. Assembly or kit designated by Key 0 or ••/•.
11. Grouping index number.
12. Page number within the grouping index.
13. Manual title.
14. Page publication date.

NOTE: ⇨Arrows always point toward the front of the engine.

Cylinder Block

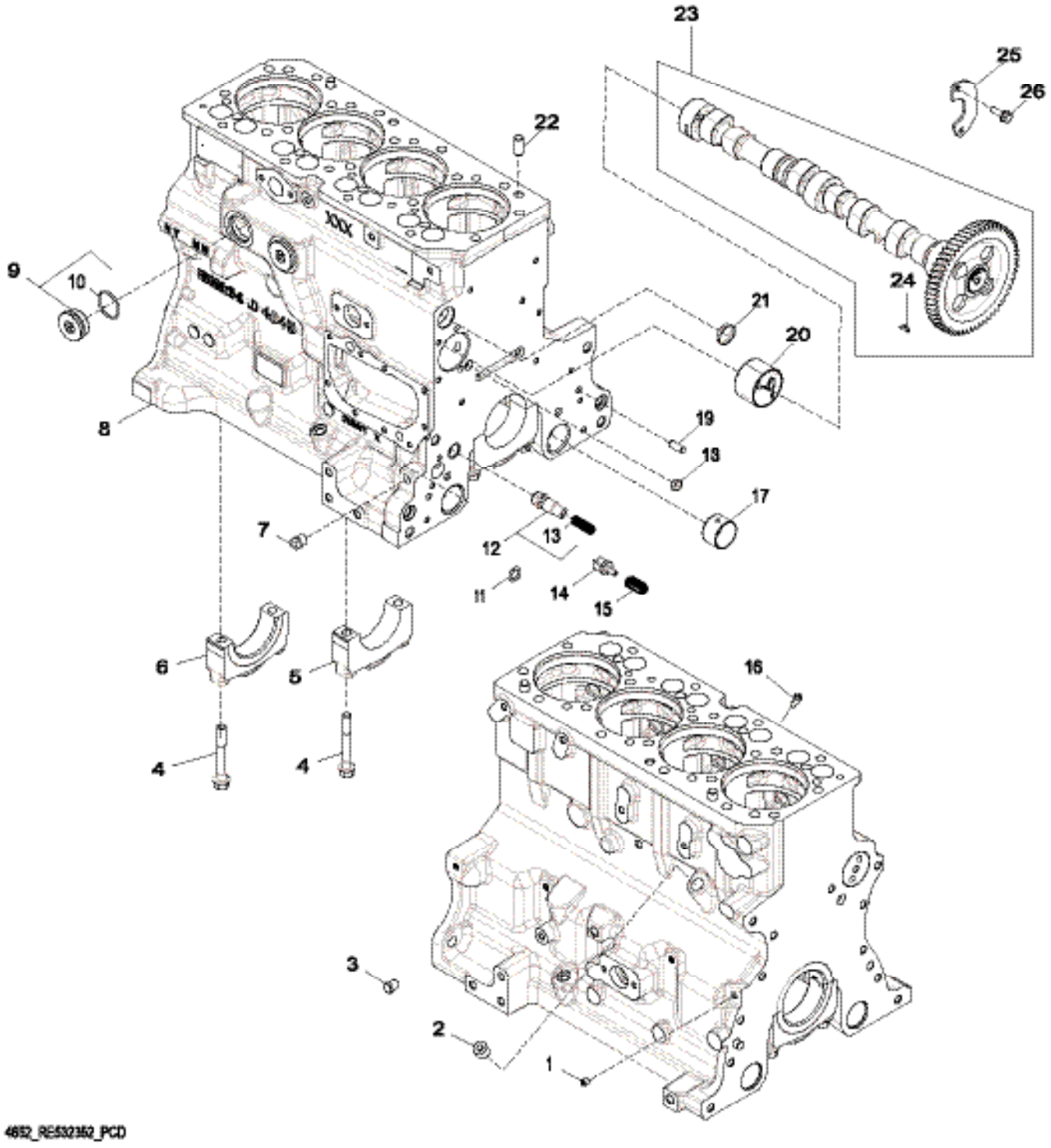

Cylinder Block

KEY	PART NUMBER	QTY	DESCRIPTION	SERIAL NUMBER
1	21-51900	1	Pipe Plug	-
2	15H584	1	Pipe Plug 1/2"	-
3	R55233	1	Pipe Plug	-
4	R528387	10	Cap Screw	-
5	R114241	4	Bearing Cap	-
6	R114240	1	Bearing Cap	-
7	15H695	1	Pipe Plug 3/8"	-
8	RE532716	1	Short Block Assembly	-
9	RE508185	2	Fitting	-
10	16-72020	1	O-Ring	-
11	R97185	1	O-Ring	-
12	RE505501	1	Bleed Valve	-
13	R131425	1	Compression Spring	-
14	R121043	1	Valve	-
15	R111137	1	Spring	-
16	R131182	4	Orifice	-
17	R115299	6	Bushing	-
18	T18891	2	Plug	-
19	B153R	2	Dowel Pin	-
20	R119874	1	Bushing	-
21	R116466	1	Plug	-
22	A120R	4	Dowel Pin	-
23	RE507595	1	Camshaft	-
	SE501815	1	Camshaft Reman REMAN FOR RE507595	-
24	R133303	1	Shaft Key	-
25	R132518	1	Plate	-
26	19M8999	2	Screw M8 X 25	-

Flywheel Housing

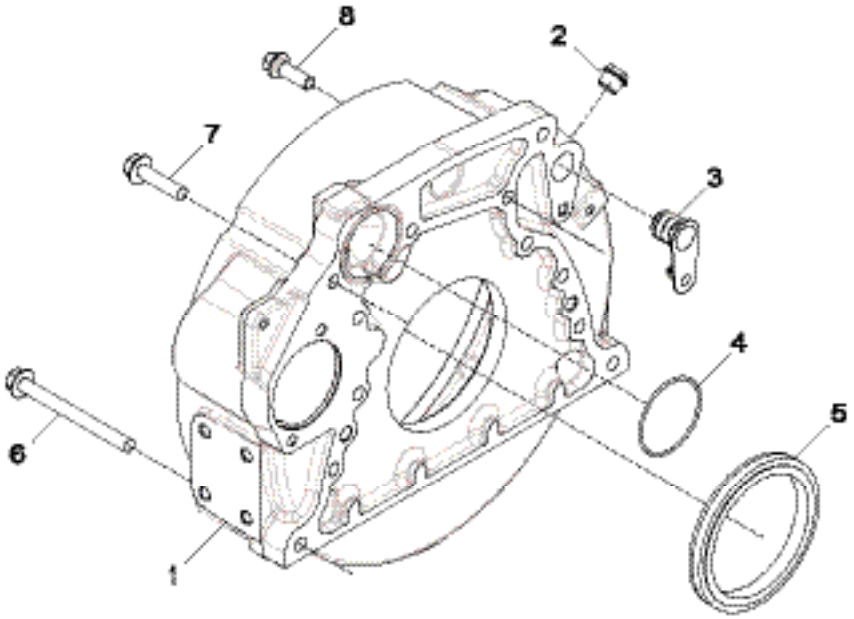

KEY	PART NUMBER	QTY	DESCRIPTION	SERIAL NUMBER
1	R503447	1	Housing SAE #4	-
2	AR106083	1	Plug	-
3	R131765	1	Plug	-
4	R61467	1	O-Ring	-
5	RE44574	1	Seal	-
6	19M7838	2	Screw M12 X 130	-
7	19M8306	2	Screw M12 X 50	-
8	R135918	8	Bolt	-

Flywheel

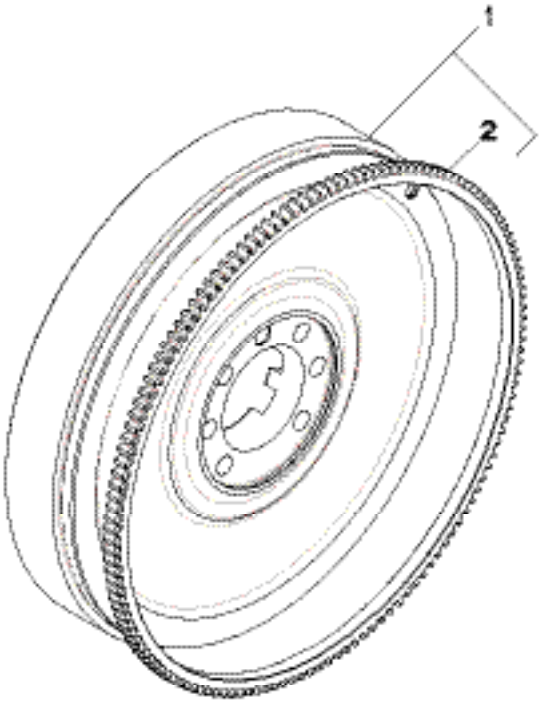

KEY	PART NUMBER	QTY	DESCRIPTION	SERIAL NUMBER
1	RE58574	1	Flywheel SAE #10 (MARKED R122409 - Includes key 2)	-
2	R114282	1	Ring Gear (142 teeth)	-

Crankshaft and Bearings

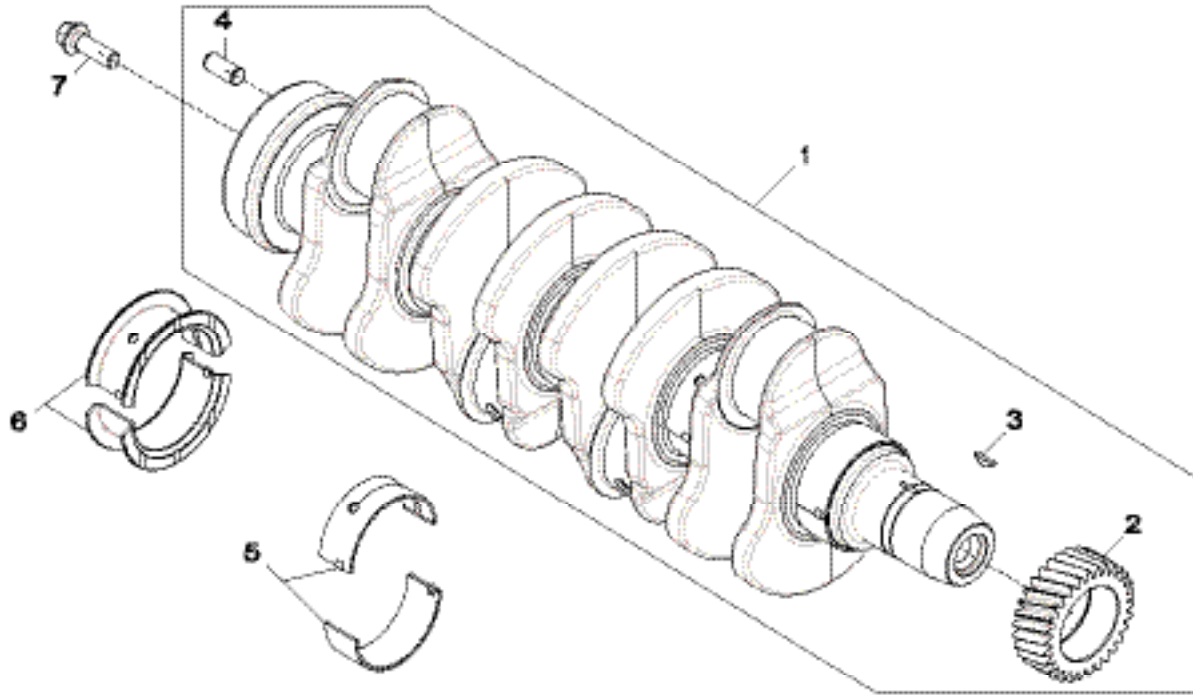

KEY	PART NUMBER	QTY	DESCRIPTION	SERIAL NUMBER
1	RE506195	1	Crankshaft (A)	-
	SE501656	1	Crankshaft Reman (B) REMAN FOR RE506195	-
2	R120631	1	Gear	-
3	R505609	1	Shaft Key	-
4	R48685	1	Dowel Pin	-
5	RE65165	4	Bearing Kit STD; KIT R123561 AND R123562	-
6	RE65168	1	Bearing Kit STD; KIT R123563 AND R123564	-
7	R135918	4	Bolt	-

(A) Grinding Guidelines : See CTM104

(B) With Bearings

Crankshaft Pulley

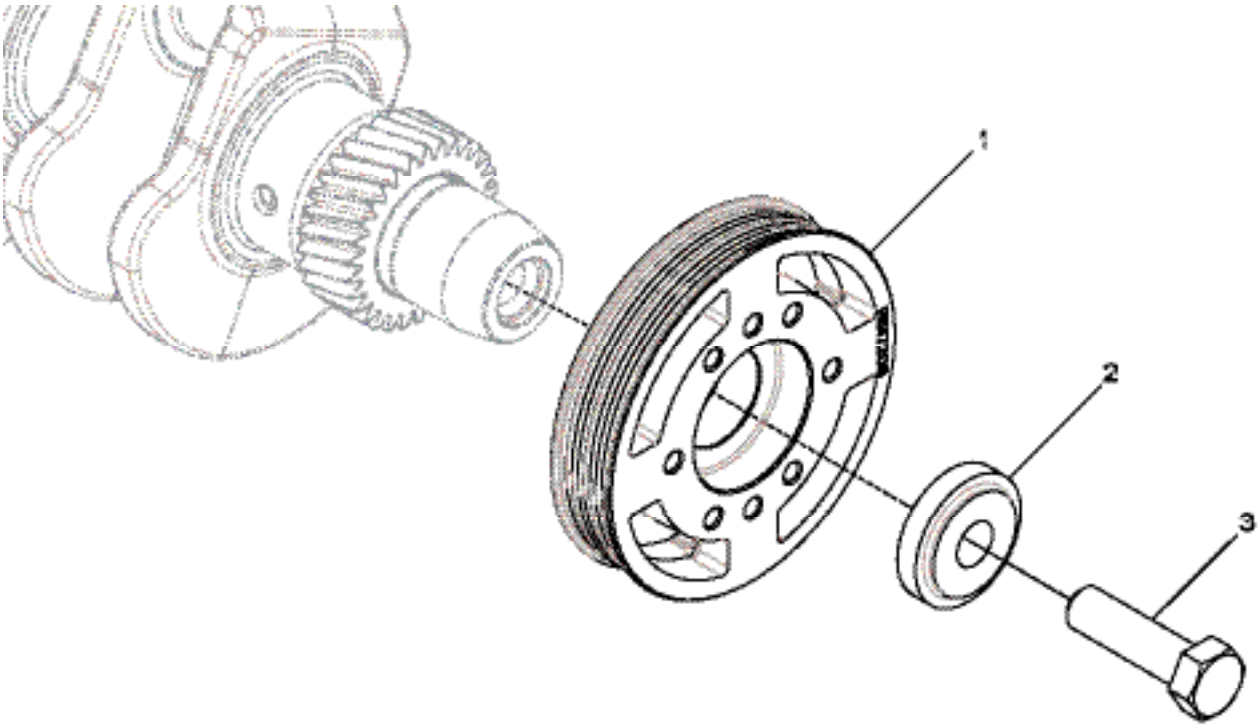

KEY	PART NUMBER	QTY	DESCRIPTION	SERIAL NUMBER
1	R517208	1	Pulley	-
2	R517237	1	Washer	-
3	R516648	1	Cap Screw	-

Connecting Rods and Pistons

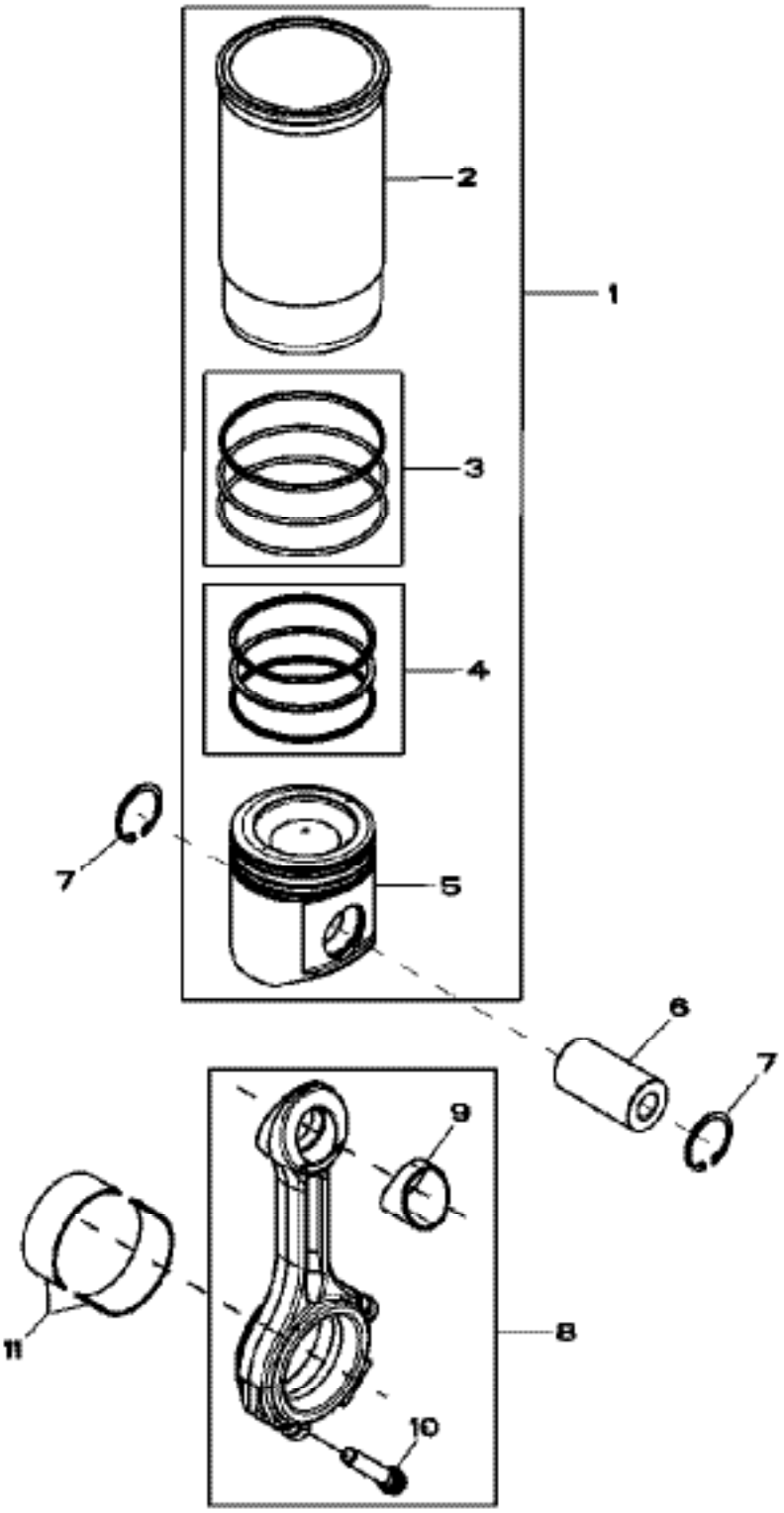

Connecting Rods and Pistons

KEY	PART NUMBER	QTY	DESCRIPTION	SERIAL NUMBER
1	DZ109732	4	Piston-Liner Kit	-
2		1	Cylinder Liner 1 (ORDER RE536083)NSEP	-
3	AR65507	1	O-Ring Kit	-
4	RE507852	10	Piston Ring Kit (PKG 3)	-
5		1	Piston (MARKED RE527039) (ORDER RE536083)NSEP	-
6	R502755	4	Piston Pin OD= 41MM LGTH= 77MM	-
7	R54114	8	Snap Ring	-
8	RE500608	4	Connecting Rod (MARKED R500335)	-
	SE501094	1	Connecting Rod Reman (MARKED R500335) (REMAN FOR RE500608)	
9	R114082	1	Bushing	-
10	R501124	2	Screw A= 61MM M12	-
11	RE65908	4	Bearing (KIT (2) R113698)STD	-
	RE65909	*	Bearing AR (A) ID -0.254MM, (KIT (2) R130578)	-

* - as required

Balancer Shaft

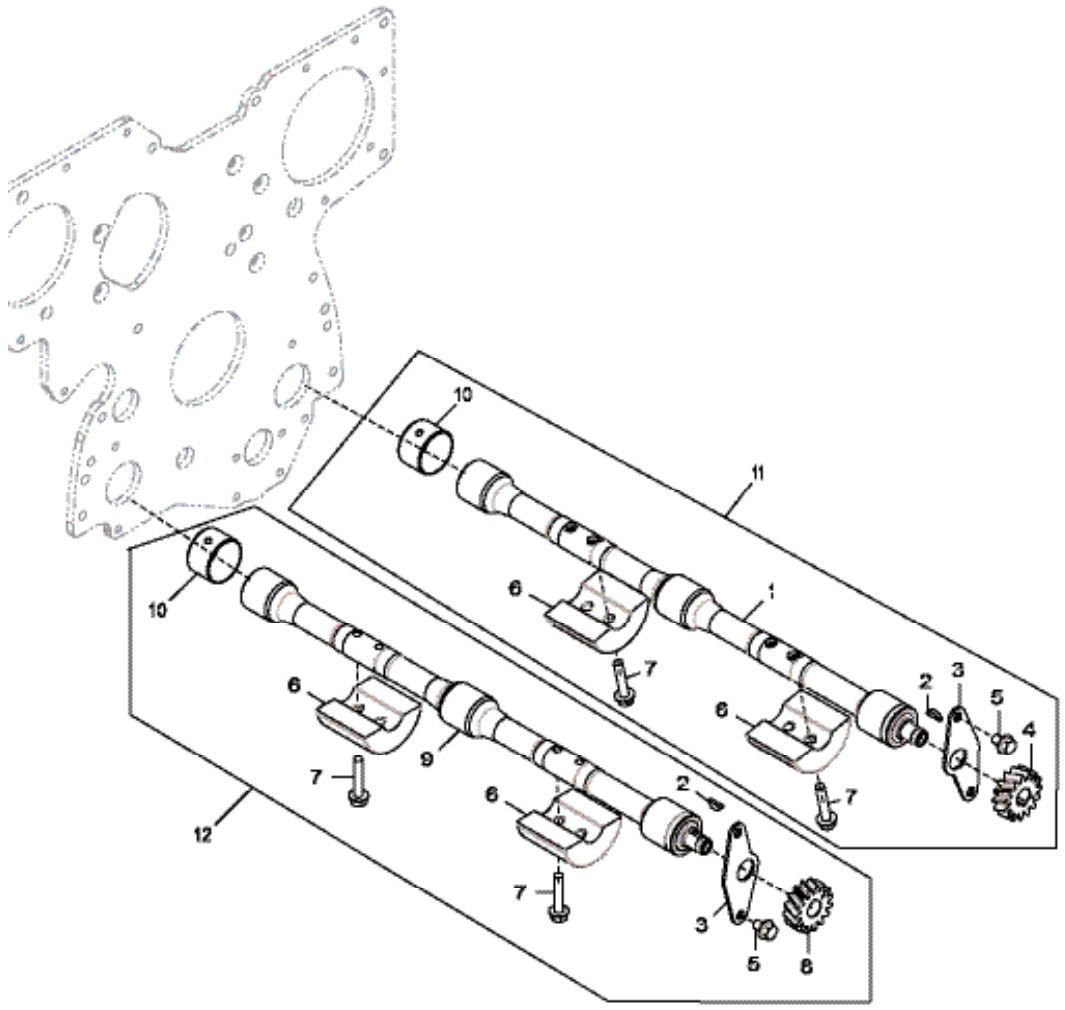

KEY	PART NUMBER	QTY	DESCRIPTION	SERIAL NUMBER
1		1	Balancer Shaft	-
2	R133303	1	Shaft Key	-
3	R116078	1	Plate	-
4	R120639	1	Gear Z=15, Left Hand	-
5	19M8998	4	Screw M8 x 12	-
6	R500650	4	Weight	-
7	19M8882	8	Screw M8 x 40	-
8	R120637	1	Gear Z=15, Right Hand	-
9		1	Balancer Shaft	-
10	R115299	1	Bushing	-
11	RE502446	2	Balancer Shaft, Left Hand	-
12	RE502447	1	Balancer Shaft, Right Hand	-

Front Plate

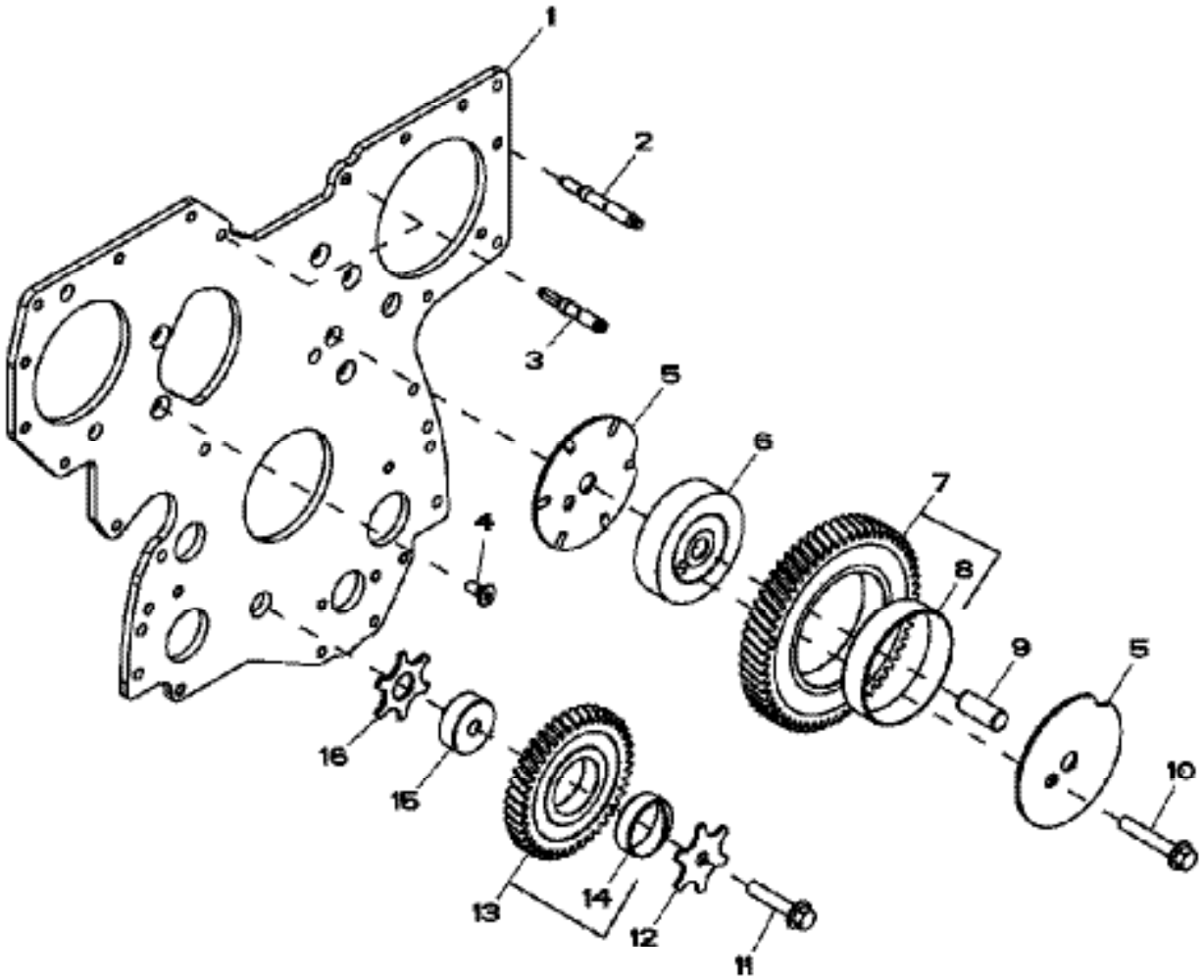

KEY	PART NUMBER	QTY	DESCRIPTION	SERIAL NUMBER
1	R504282	1	Plate	-
2	R123584	7	Stud	-
3	R134518	2	Stud	-
4	R136475	5	Screw	-
5	R515494	2	Thrust Washer	-
6	R504843	1	Shaft	-
7	RE508489	1	Gear	-
8		1	Bushing	-
9	R515408	1	Dowel Pin	-
10	19M8844	1	Screw M10 x 60	-
11	19M8966	1	Screw M10 x 50	-
12	R131283	1	Thrust Washer	-
13	RE56369	1	Gear	-
14	R114193	1	Bushing	-
15	R114194	1	Shaft	-
16	R101225	1	THrust Washer	-

Timing Gear Cover & Coolant Pump

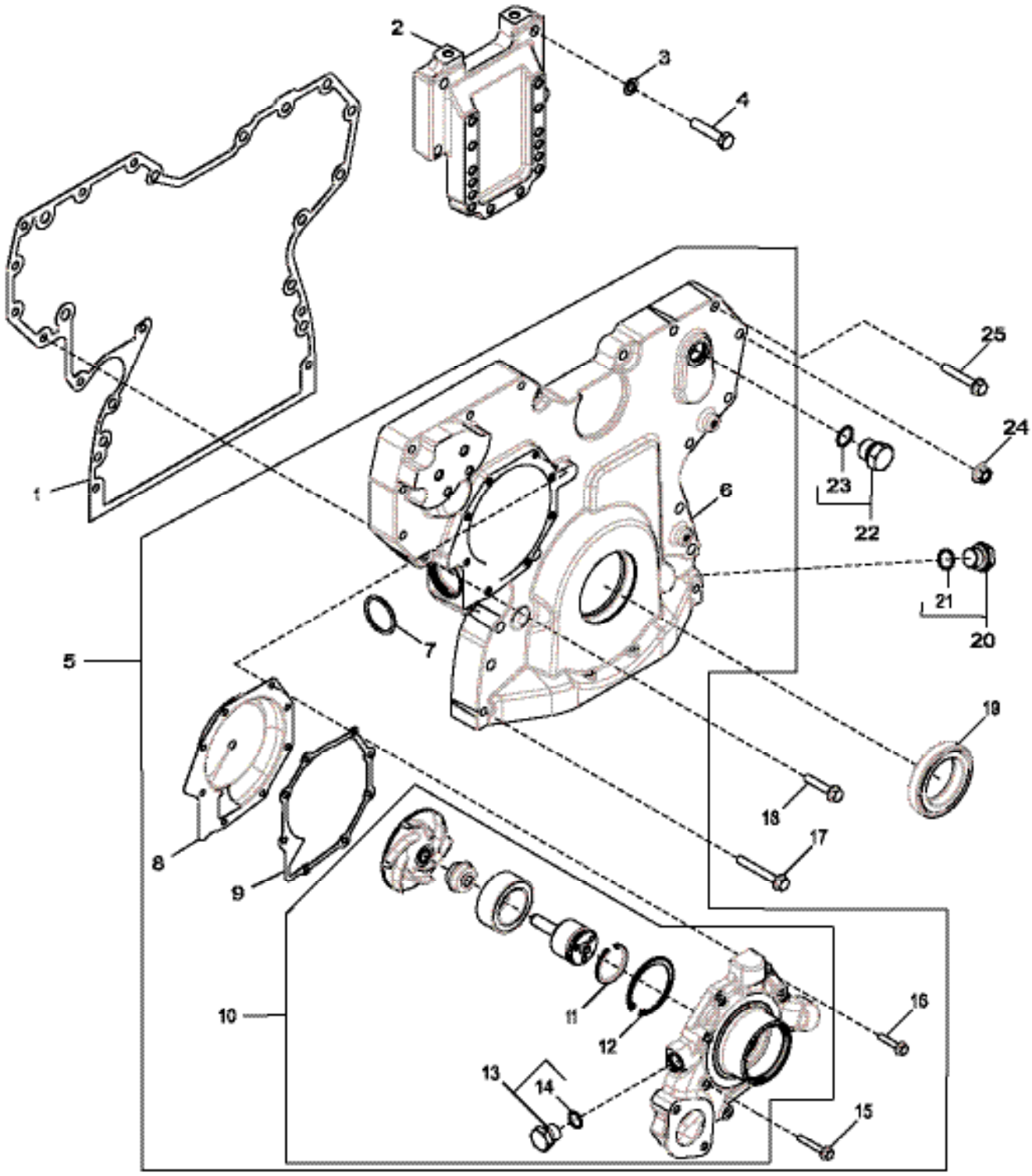

Timing Gear Cover & Coolant Pump

KEY	PART NUMBER	QTY	DESCRIPTION	SERIAL NUMBER
1	R545883	1	Gasket	-
2	R522907	1	Support	-
3	24M7096	4	Washer 10.3500 x 18 x 1.6mm	-
4	19M8488	4	Cap Screw, M10 x 45	-
5	RE527847	1	Cover	-
6	DZ10353	1	Timer Cover Assembly	-
7	R504734	1	O-Ring	-
8	RE508566	1	Insert	-
9	R123417	1	Gasket	-
10	RE527848	1	Coolant Pump*	-
11	A364R	1	Snap Ring	-
12	R71228	1	Ring	-
13	RE46685	1	Fitting Plug	-
14	16-09503	1	O-Ring 15.300 x 2.200 mm	-
15	19M7797	3	Screw M6 x 40	-
16	19M7796	5	Screw M8 x 30	-
17	19M7801	3	Screw M8 x 60	-
18	19M8317	1	Screw M8 x 40	-
19	RE538097	1	Seal	-
20	RE517370	**	Hex Plug M20 x 1.5	-
21	51M7044	1	O-Ring 17.300 x 2.200 mm	-
22	RE46687	1	Drain Plug M20 x 1.5	-
23	16-09501	1	O-Ring 19.300 x 2.200 mm	-
24	14-80811	9	Flange Nut M10	-
25	19M7800	8	Screw M8 x 50	-

** As Required

* ALSO ORDER S/S Insert Kit RE50866 AND Gasket R123417

Auxiliary Drive

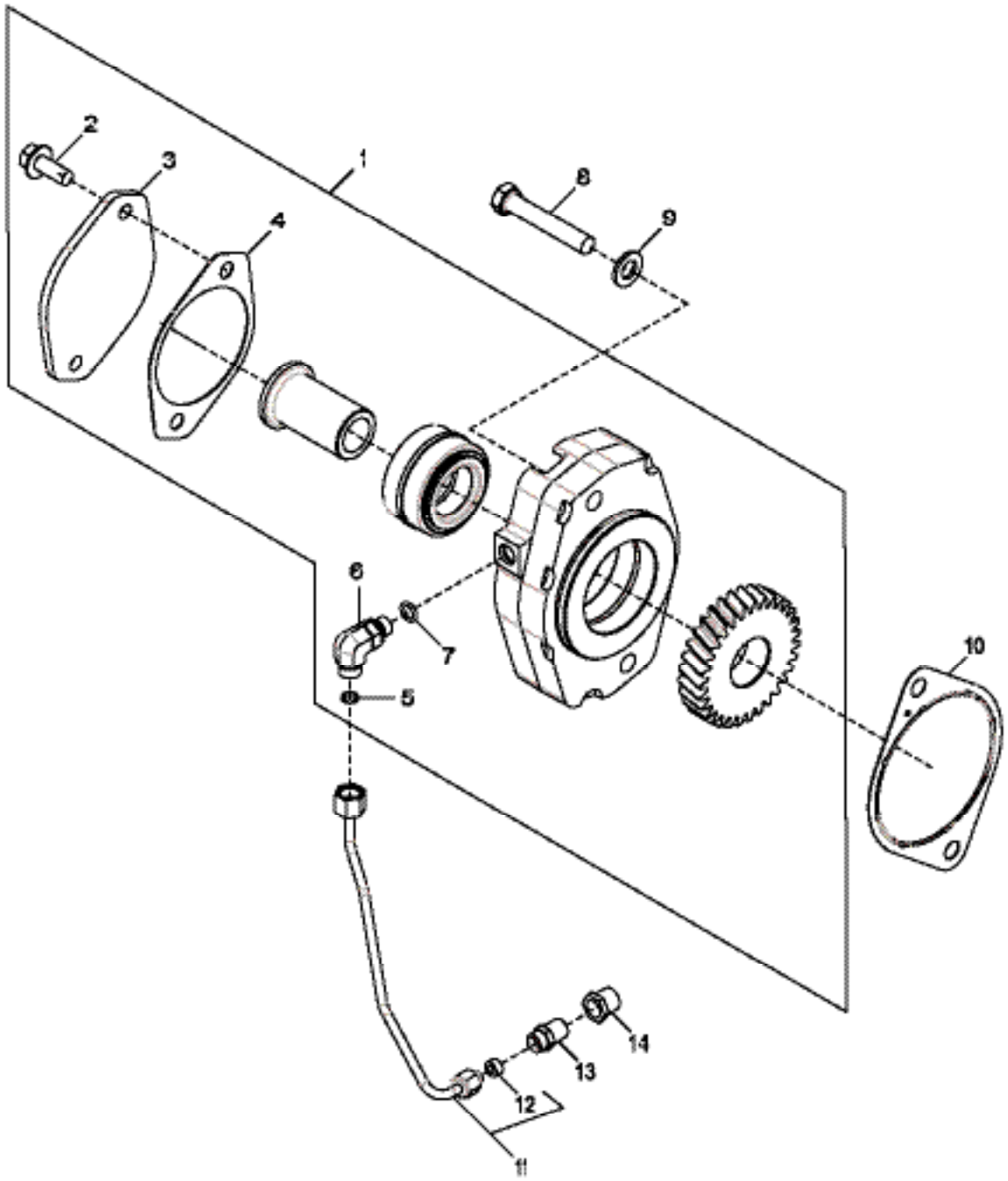

Auxiliary Drive

KEY	PART NUMBER	QTY	DESCRIPTION	SERIAL NUMBER
1	RE500825	1	Adapter Ring	-
2	19M7785	2	Screw M10 x 25	-
3	28-75001	1	Plate SAE "A"	-
4	11-75401	1	Gasket SAE "A" Pad	-
5	T77814	1	O-Ring	-
6	38H5015	1	Elbow FItting M12 x 1.5 x 9/16" - 18 UNF, Also order T77814	-
7	51M7040	1	O-Ring 9.300 x 2.200 mm	-
8	19M7753	2	Capscrew M12 x 70	-
9	24M7047	2	Washer 13 x 24 x 2.500 mm	-
10	R522690	1	Gasket	-
11	RE506914	1	Oil Line *	-
12	R51936	1	Sealing Washer *	-
13	R110664	1	Coupling 1/4" - 18 NPT x 1/2" - 24 UNS *	-
14	15H700	1	Pipe Busing 1/4", 3/8" - 18 NPT x 1/4" - 18 NPT	-

930 Auxiliary Drive Oil Supply Conversion Parts * M65T13

INCLUDING M65C13 HE MODELS WITH PTO / ELECTRIC CLUTCH

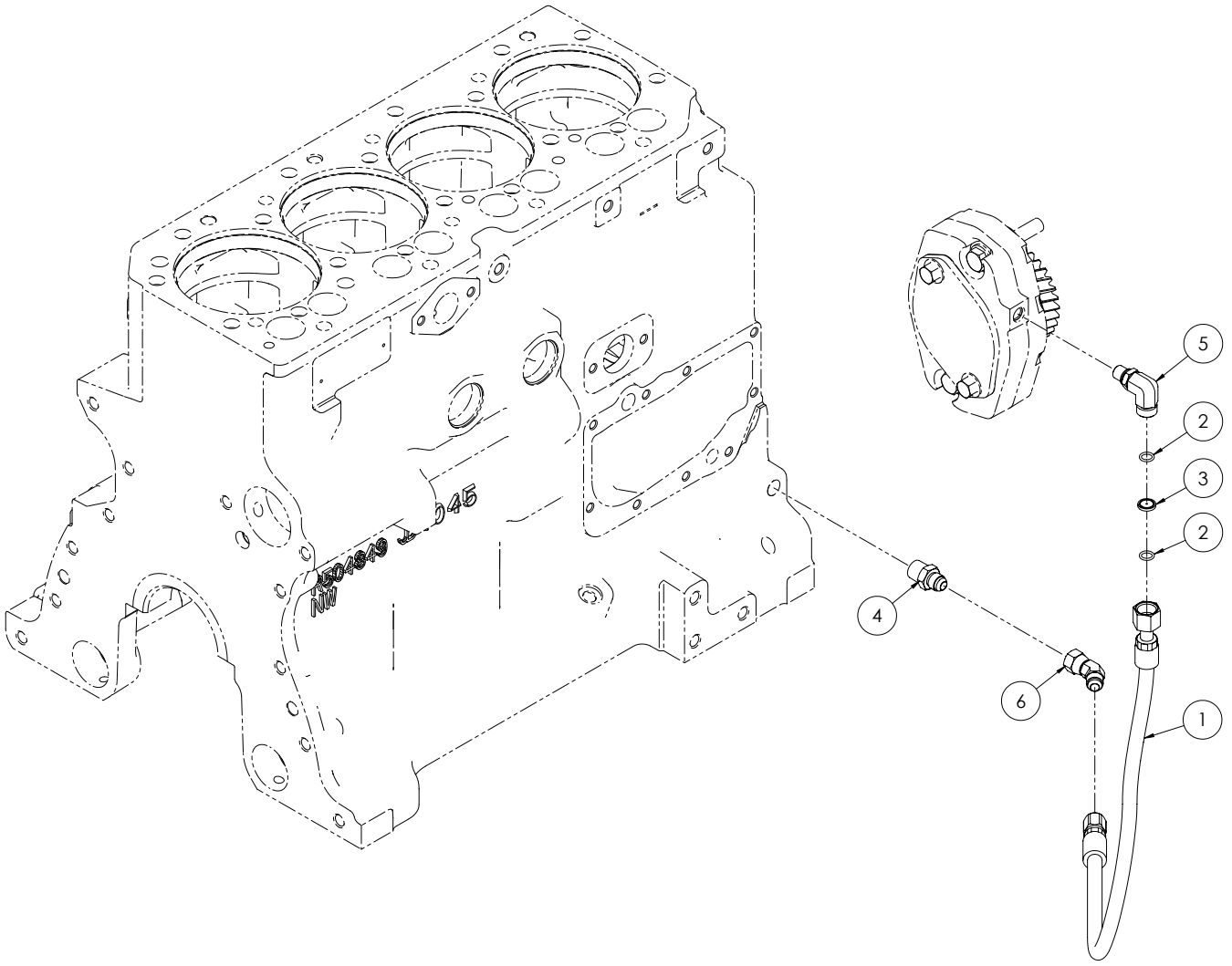

KEY	PART NUMBER	QTY	DESCRIPTION	SERIAL NUMBER
1	18-69502	1	Hose Assembly 1/4"ID x 15"	-
2	16-69501	2	O-Ring	-
3	N275799	1	Restriction Orifice	-
4	21-52800	1	Male Connector 3/8 NPT x 3/8-37T *	-
5	21-69501	1	M. Elbow 90, Stl. M12 x 1.5 x 3/8 O-Ring Face Seal	-
6	21-59519	1	Swivel Elbow 45° 3/8 NPT - 37T *	-
			* Connector and Swivel Elbow replace Male 45° Elbow 21-00605 (new parts ease installation)	

Auxiliary Drive Cover

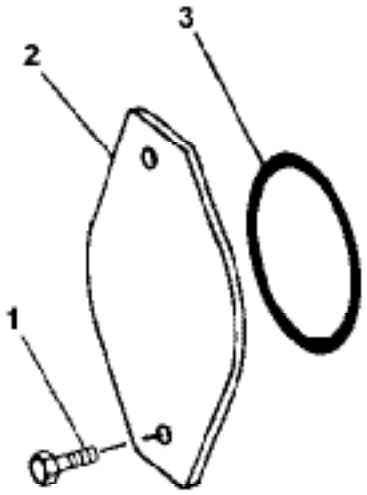

KEY	PART NUMBER	QTY	DESCRIPTION	SERIAL NUMBER
1	19M7790	2	Screw M12 x 35	-
2	R135757	1	Cover	-
3	16-19503	1	O-Ring	-

Oil Filter

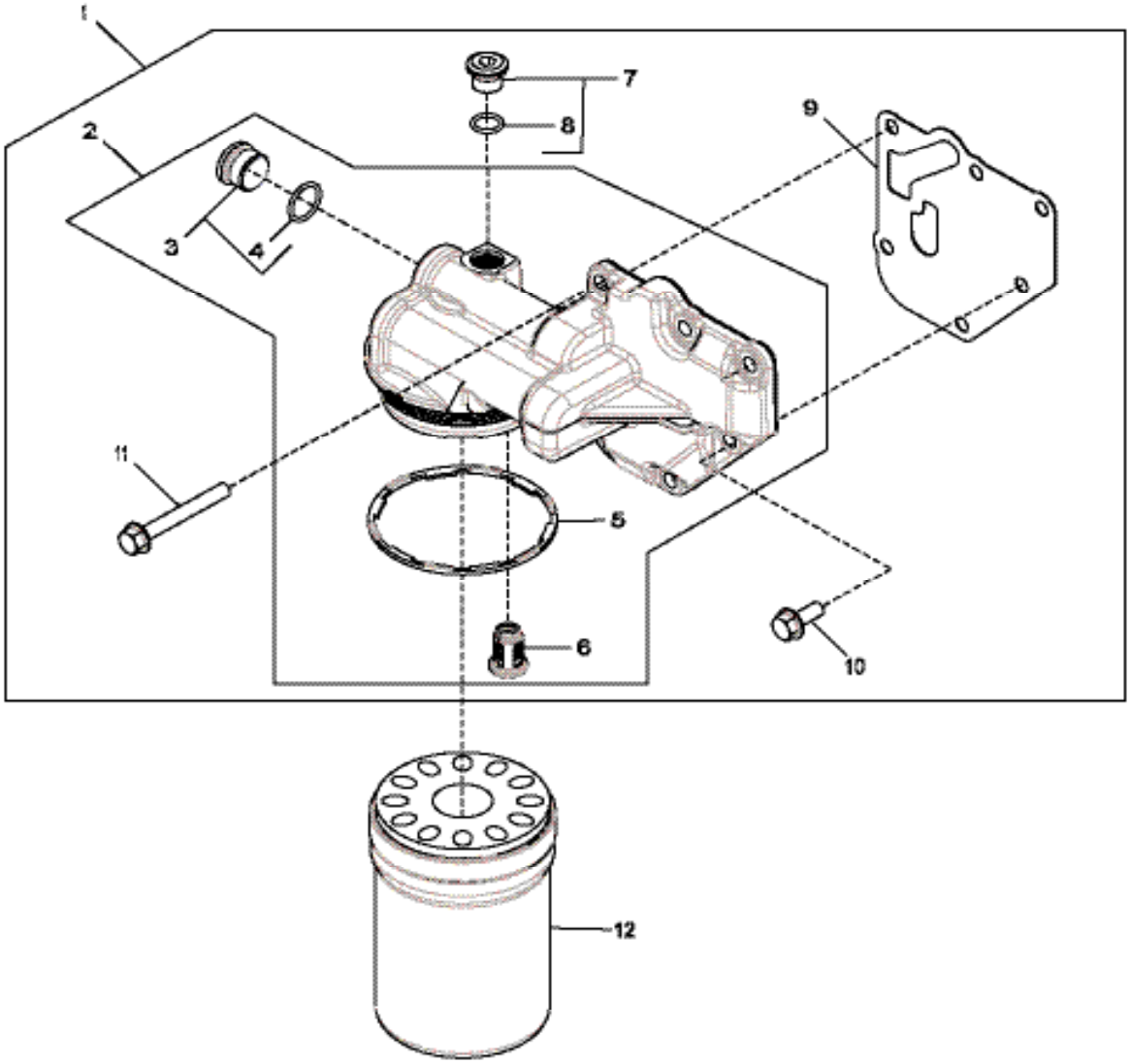

Oil Filter

KEY	PART NUMBER	QTY	DESCRIPTION	SERIAL NUMBER
1	RE508987	1	Filter Head	-
2	RE504564	1	Filter Head	-
3	RE505232	2	Fitting Plug	-
4	16-09501	1	O-Ring	-
5	R502513	1	Sealing Ring	-
6	RE504543	1	Pressure Relief Valve	-
7	RE52242	1	Drain Plug	-
8	16-00016	1	O-Ring	-
9	R500374	1	Gasket	-
10	RE67238	1	Screw M8 X 20	-
11	19M7802	5	Screw M8 X 65	-
12	24-09501	1	Oil Filter	-

Engine Oil Dipstick

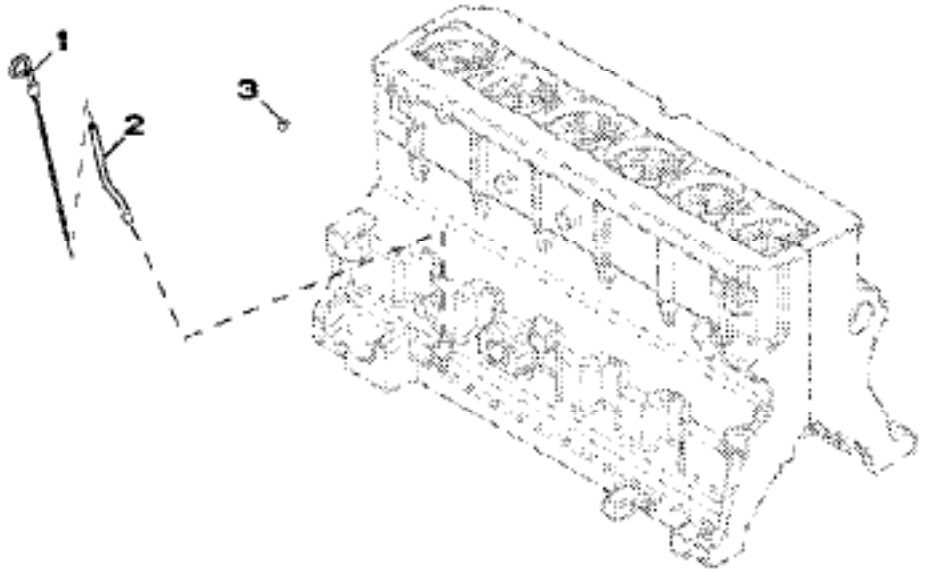

KEY	PART NUMBER	QTY	DESCRIPTION	
1	RE69443	1	Dipstick	-
2	R502604	1	Dipstick Tube	-
3	R502725	1	Plug	-

Engine Oil Dipstick

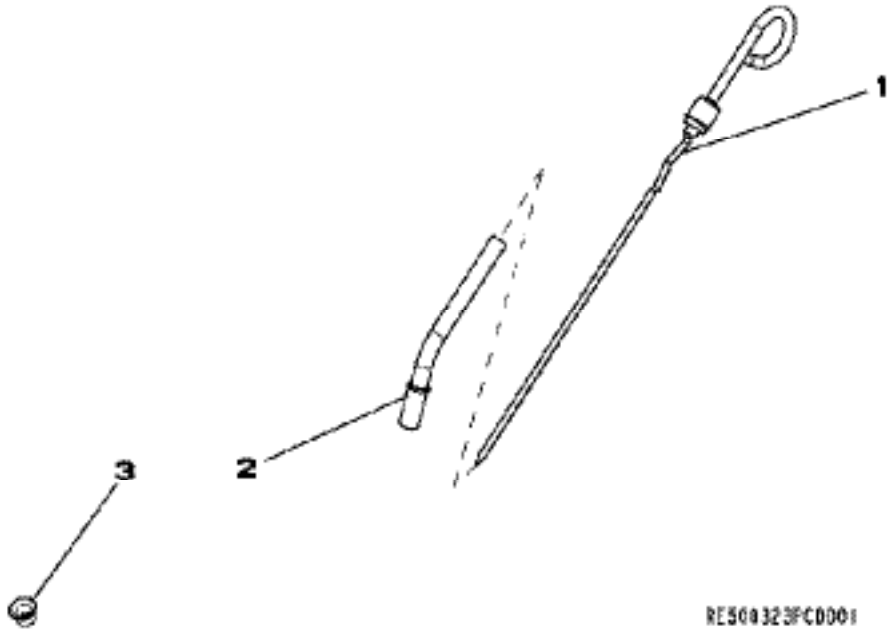

KEY	PART NUMBER	QTY	DESCRIPTION	
1	RE500168	1	Dipstick LH	-
2	R500116	1	Dipstick Tube LH	-
3	R502725	1	Plug	-

Engine Oil Dipstick

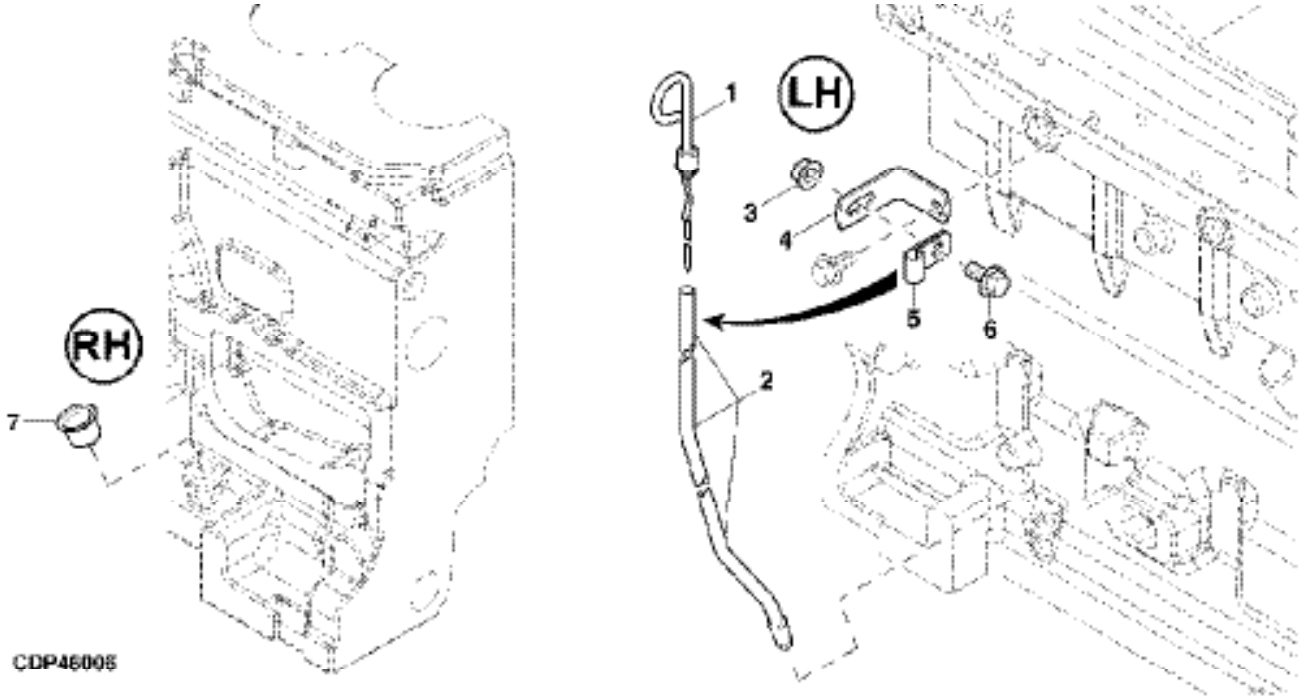

KEY	PART NUMBER	QTY	DESCRIPTION	
1	RE66178	1	Dipstick LH	-
2	R516308	1	Dipstick Tube LH	-
3	14-80811	1	Flange Nut M10	-
4	R116116	1	Bracket	-
5	T28862	1	Clamp	-
6	19M7784	1	Screw M10 X 20	-
7	R502725	1	Plug RH	-

Oil Filter Neck

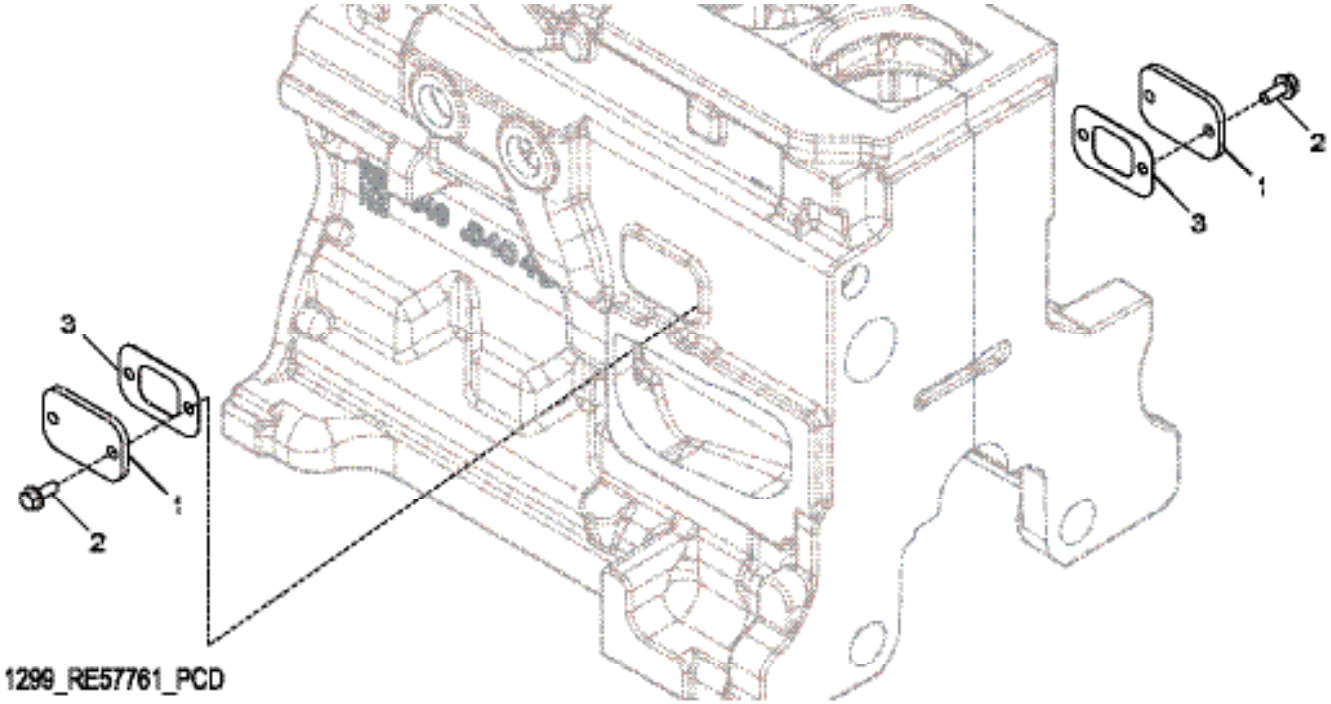

KEY	PART NUMBER	QTY	DESCRIPTION	
1	R116296	2	Cover	-
2	RE67238	4	Screw*	-
3	11-79501	2	Gasket	-

* Threads With Pre-Applied Sealant

Oil Pump

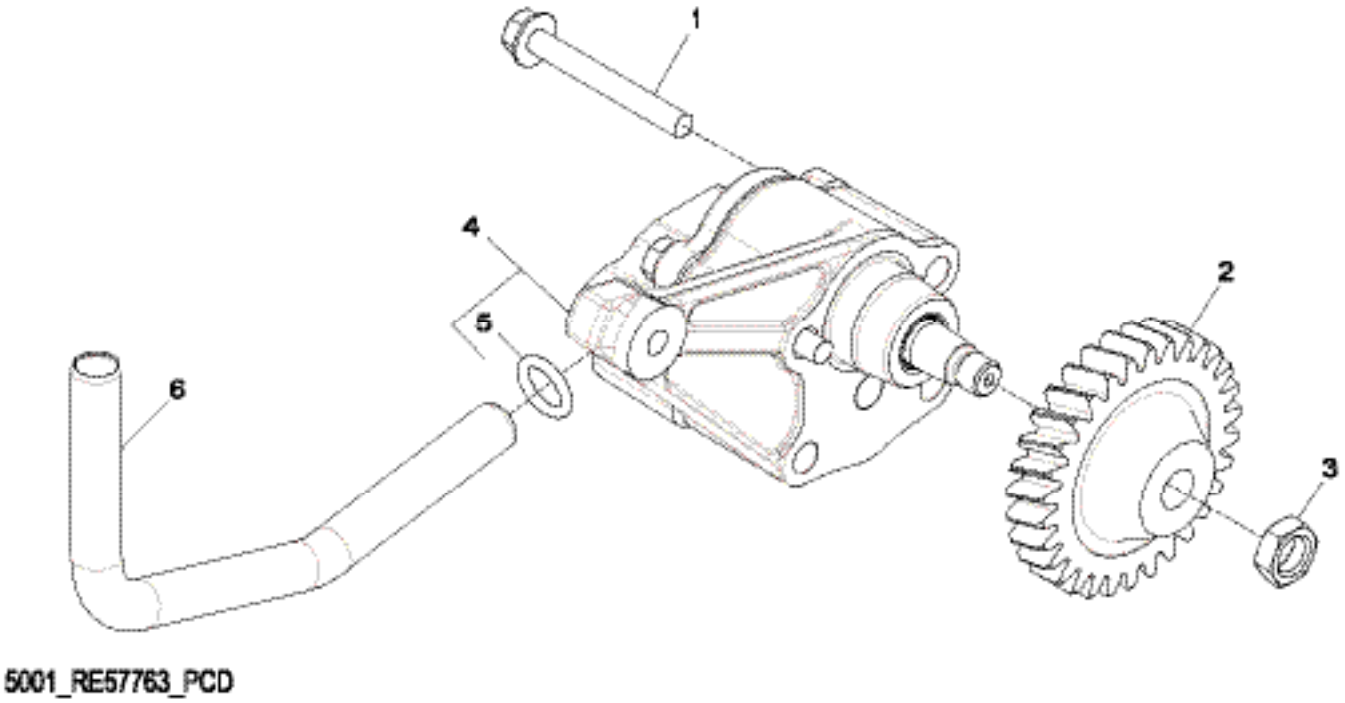

KEY	PART NUMBER	QTY	DESCRIPTION	
1	19M7802	2	Screw M8 X 65	-
2	R120638	1	Gear	-
3	14M7066	1	Nut M12	-
4	DZ100057	1	Oil Pump	-
5	R97185	1	O-Ring	-
6	R121376	1	Tube	-

Oil Drain M65T13

KEY	PART NUMBER	QTY	DESCRIPTION	SERIAL NUMBER
1	21-04816	1	Street Elbow, 90, Stl 3/4NPT x 1/2NPT	-
2	21-00134	1	Bushing, Brass 1/2NPT x 3/8NPT	-
3	36-71002	1	Shut-Off Valve, Brass 3/8NPT x 1/2-45T	-
4	21-71042	2	F. Swivel, Brass 1/2HB x 1/2-45T Push-On (Universal Seat)	-
5	41-01032	10	Hose 1/2"ID Push-On	-
6	21-71040	1	M. Connector Brass 1/2NPT x 1/2-45T	-

Oil Pan

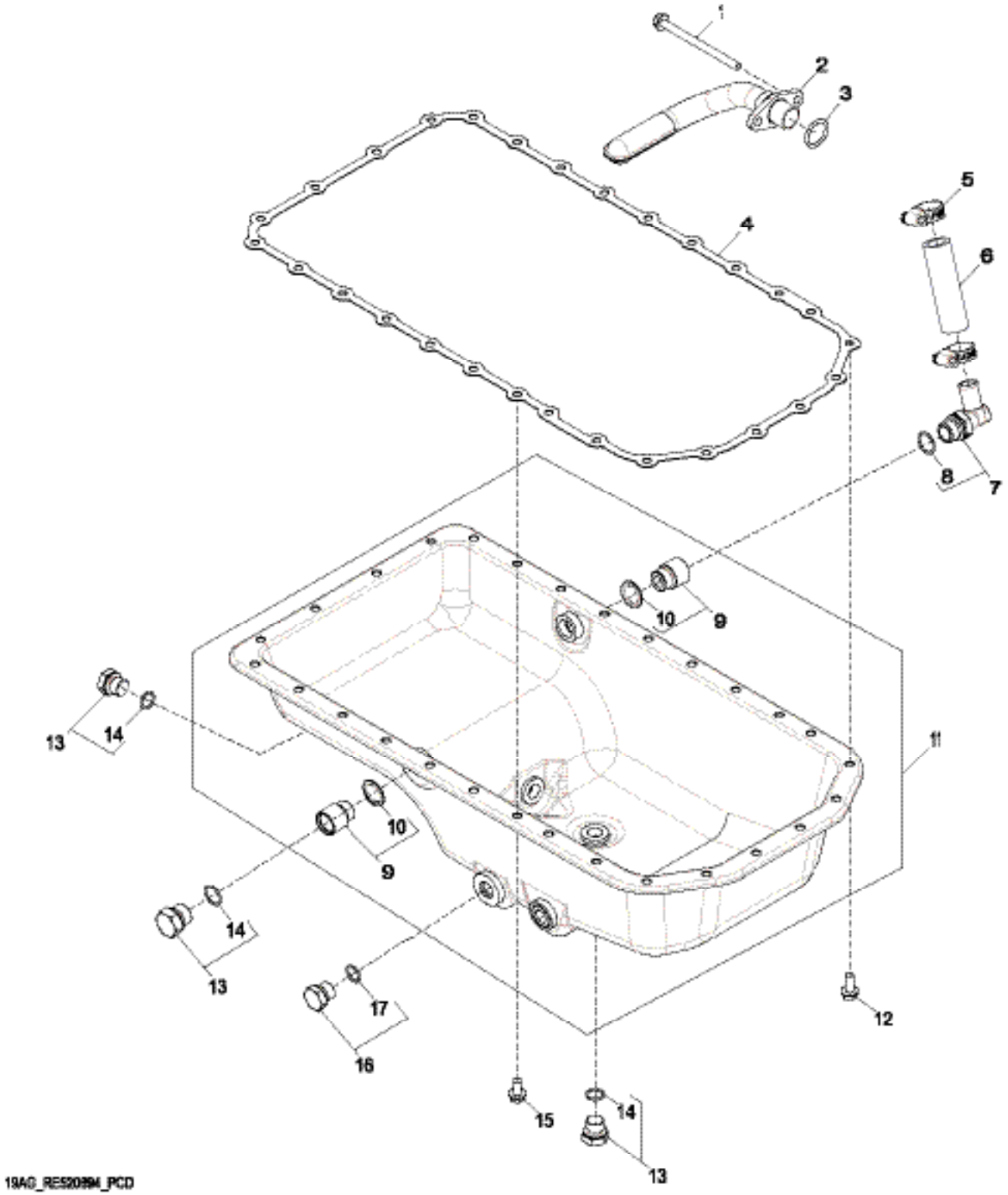

Oil Pan

KEY	PART NUMBER	QTY	DESCRIPTION	SERIAL NUMBER
1	19M10075	2	Screw M8 X 110	-
2	RE516280	1	Oil Pump Intake	-
3	R61871	1	O-Ring	-
4	R521493	1	Gasket	-
5	RE65978	2	Clamp	-
6	R523372	1	Hose	-
7	RE502699	1	Elbow Fitting	-
8	16-09502	1	O-Ring 19.300 X 2.200 mm	-
9	RE529802	2	Adapter Fitting	-
10	R519742	2	Seal	-
11	RE520147	1	Oil Pan	-
12	19M8062	6	Screw M8 X 20	-
13	RE46685	3	Fitting Plug	-
14	16-09503	3	O-Ring 15.300 X 2.200 mm	-
15	19M8163	22	Bolt M8 X 16	-
16	RE46687	1	Drain Plug	-
17	16-09501	1	O-Ring 19.300 X 2.200 mm	-

Cylinder Head with Valves

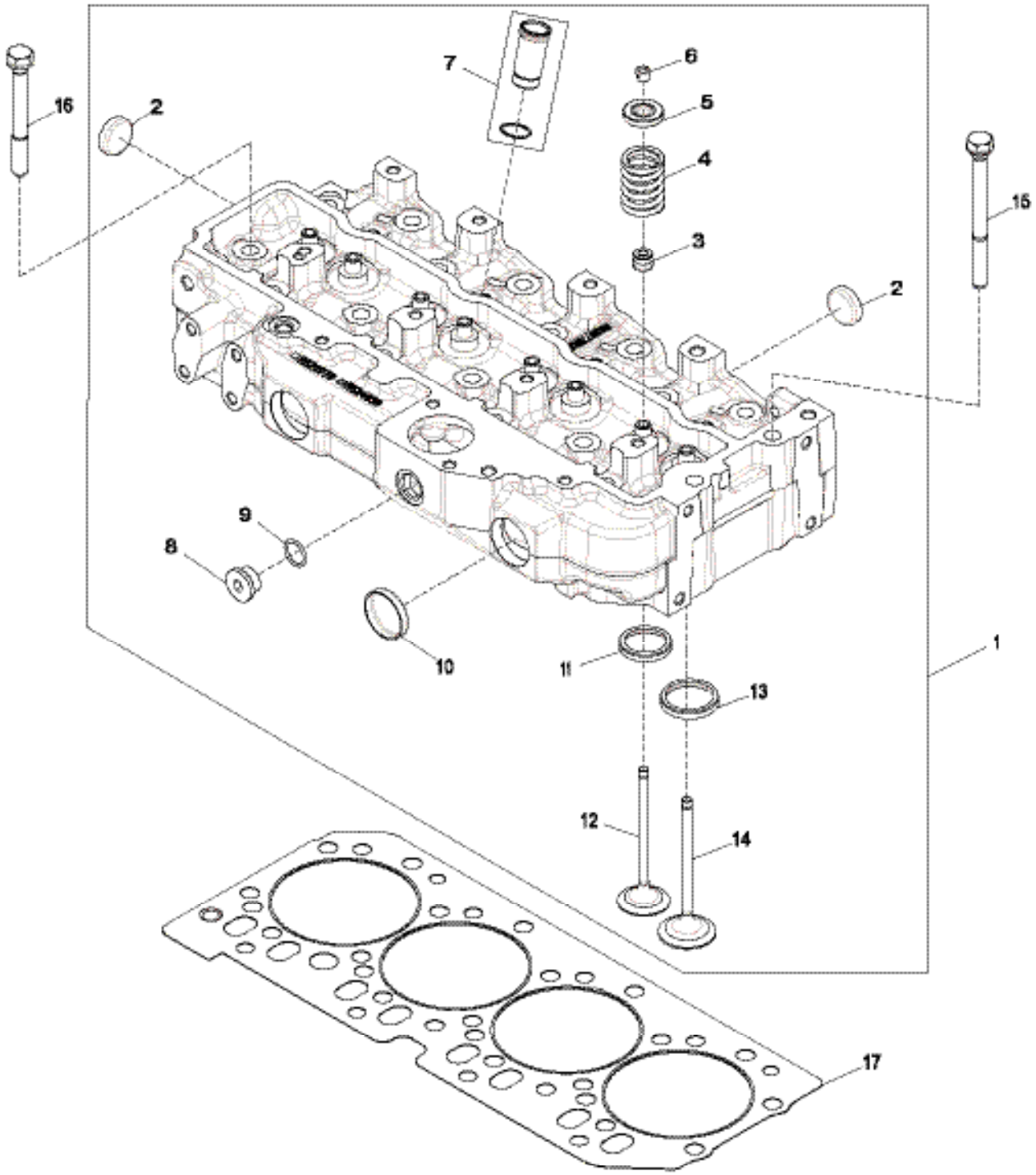

Cylinder Head with Valves

KEY	PART NUMBER	QTY	DESCRIPTION	SERIAL NUMBER
1	RE532328	1	Cylinder Head	-
	SE501809	1	Cylinder Head Reman	-
2	CD16284	4	Plug	-
3	RE31617	8	Seal	-
4	R26125	8	Spring	-
5	RE60005	8	Rotator	-
6	R91889	16	Retainer	-
7	RE527456	4	Sleeve	-
8	21-09507	1	Plug	-
9	R26906	1	O-Ring	-
10	R43409	2	Plug	-
11	R106829	4	Valve Seat Insert	-
12	R90692	4	Exhaust Valve	-
13	R106831	4	Valve Seat Insert	-
14	R98062	4	Intake Valve	-
15	R534091	4	Cap Screw	-
16	R85363	16	Cap Screw	-

Rocker Arm, Rocker Arm Shaft & Cam Follower

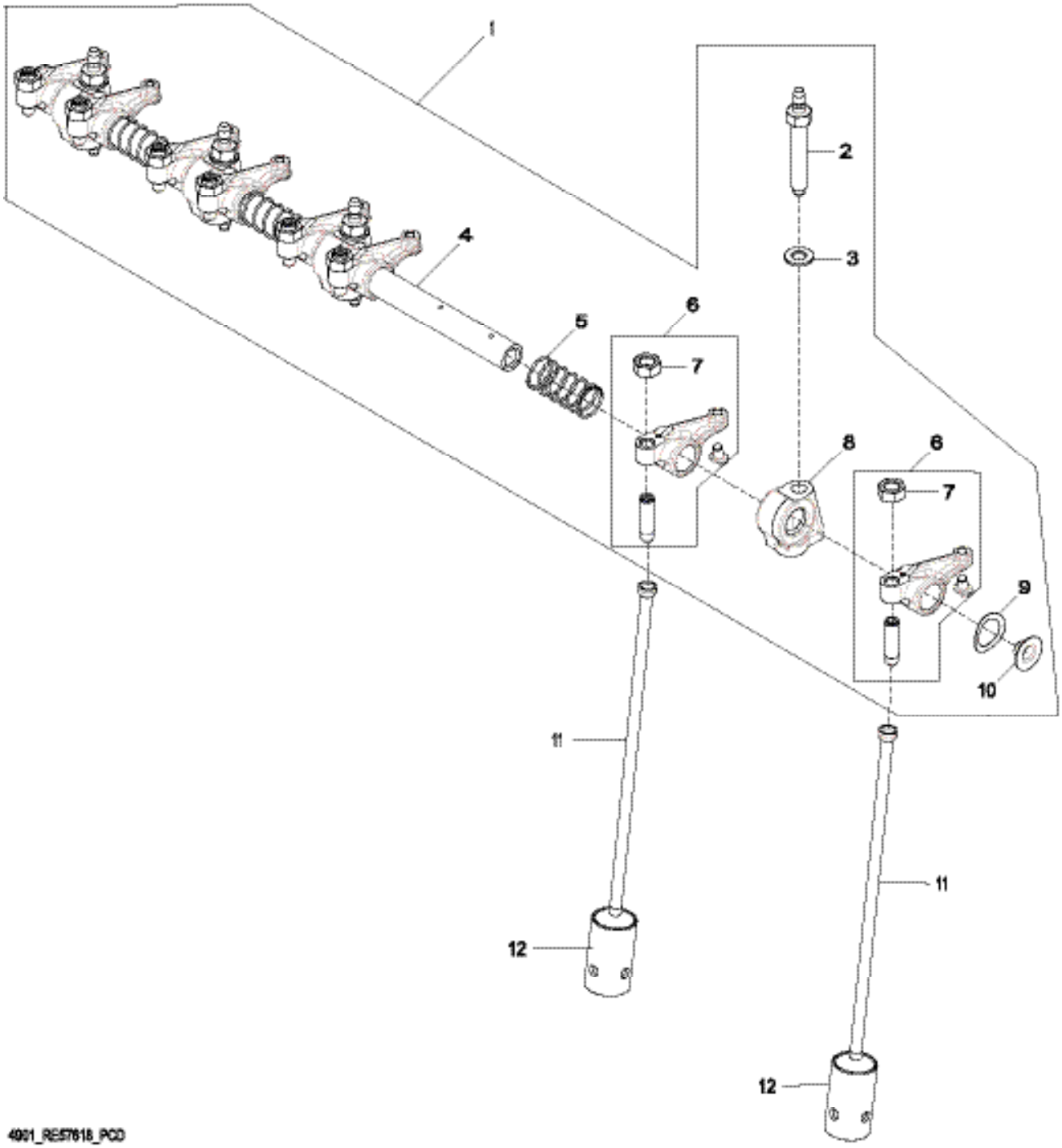

Rocker Arm, Rocker Arm Shaft & Cam Follower

KEY	PART NUMBER	QTY	DESCRIPTION	SERIAL NUMBER
1	RE547827	1	Rocker Arm Shaft	-
2	R123271	4	Stud	-
3	R529416	4	Washer	-
4	RE519736	1	Rocker Arm Shaft	-
5	T20314	3	Spring	-
6	RE508317	8	Rocker Arm	-
7	14M7148	1	Nut M10	-
8	R123161	4	Support	-
9	T20316	2	Washer	-
10	R54565	2	Plug	-
11	R107731	8	Push Rod	-
12	R123565	8	Cam Follower	-

Valve Cover

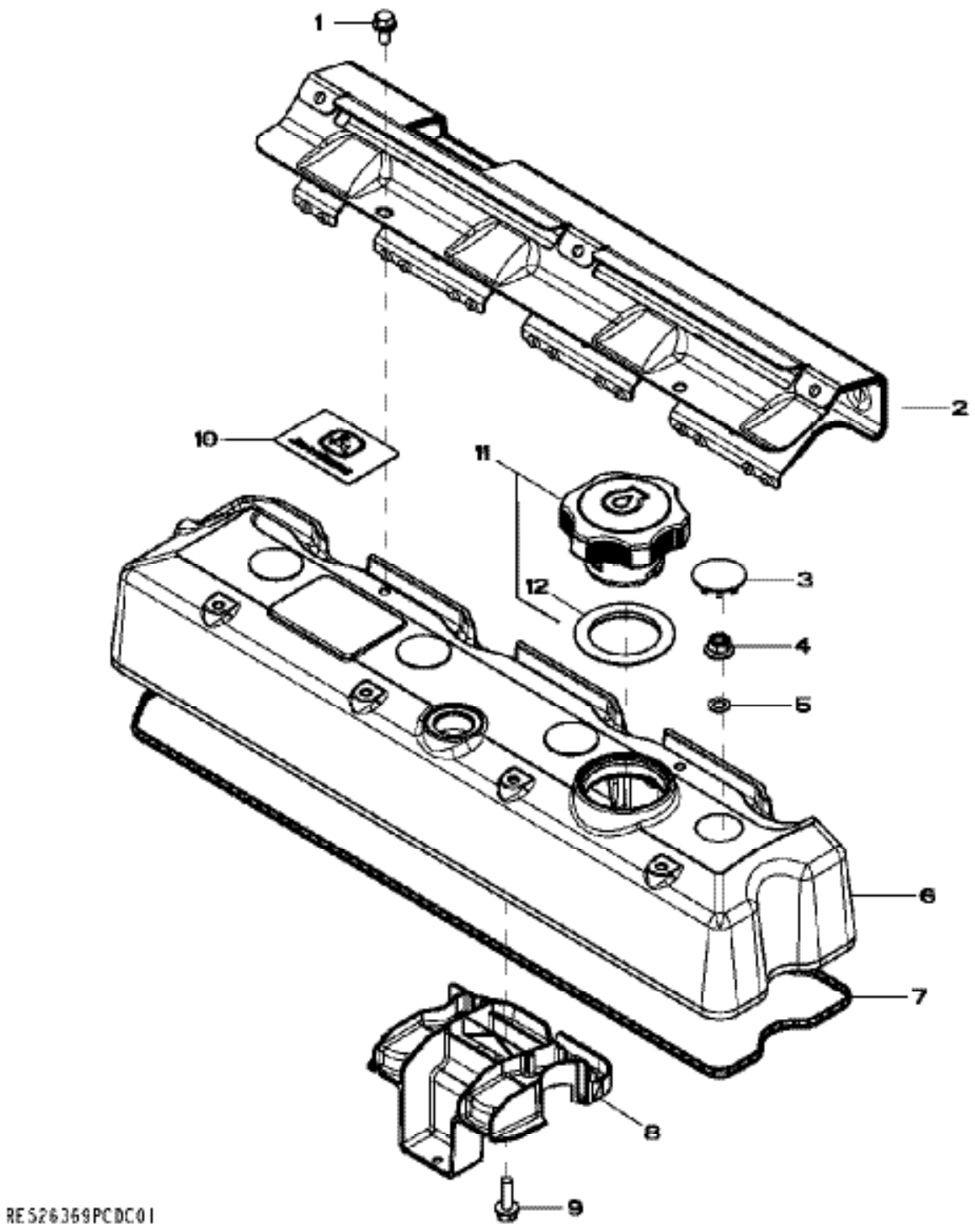

Valve Cover

KEY	PART NUMBER	QTY	DESCRIPTION	SERIAL NUMBER
1	RE527858	2	Screw M6 X 12 *	-
2	R522409	1	Heat Shield	-
3	H23125	4	Plug	-
4	R123574	4	Nut M8	-
5	R123575	4	O-Ring 7.595 X 2.616 mm (0.299" X 0.103")	-
6	R521326	1	Valve Cover	-
7	R524468	1	Gasket SUB FOR R523925	-
8	RE528742	1	Deflector	-
9	19M7862	1	Screw M6 X 20	-
10	R521401	1	Medallion	-
11	RE535560	1	Filler Cap	-
12	R502902	1	Packing ID = 44 mm	-

* Threads With Pre-Applied Sealant

Crankcase Breather Filter M65T13

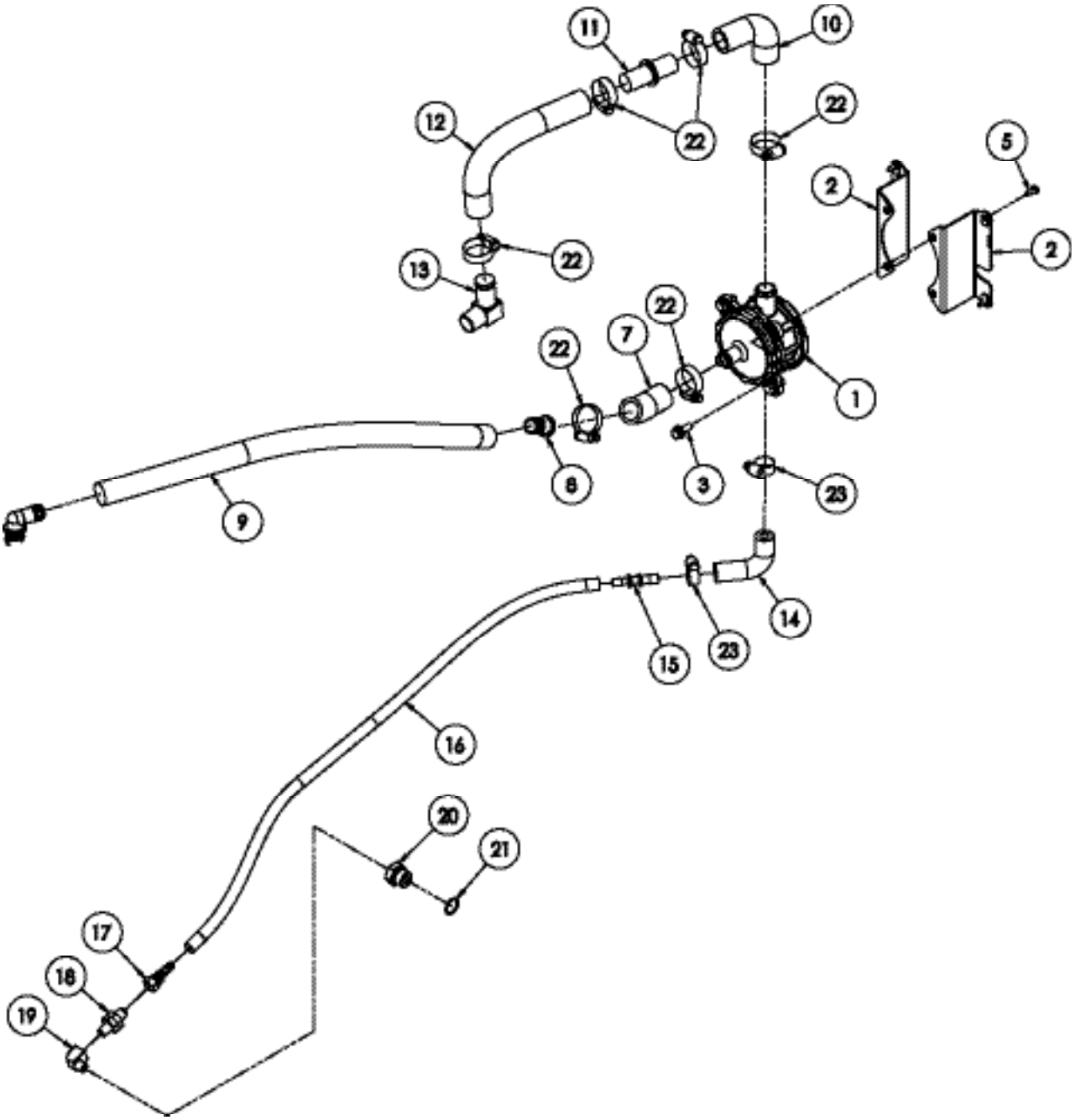

Crankcase Breather Filter M65T13

KEY	PART NUMBER	QTY	DESCRIPTION	SERIAL NUMBER
1	RE522744	1	Crankcase Breather	-
2	23-21204	2	Bracket	-
3	19M7866	4	Cap Screw, Hex Head Flanged M8 x 1.25 x 20mm	-
5	12-92003	4	MSCR, RD HD Phillips M5 x 0.8 x 16 mm S/S with captive lock and flat washers	-
7	18-21209	1	Hose, Crankcase Breather Inlet 1" ID Molded *	-
8	21-29506	1	Reducing Union, PVC 1" HB x 3/4 HB	-
9	41-00004	25.8	Hose 3/4" ID 1 Ply	-
10	18-21208	1	Hose, Crankcase Breather Inlet 1" ID Molded *	-
11	21-24001	1	Male Union, PVC 1" HB	-
12	R519368	1	Hose, Rocker Cover Vent	-
13	21-12806	1	Male Elbow 90, Stl. 3/4NPT x 1"HB	-
14	145536051	1	Hose 90 degree 1/2" ID Molded	-
15	R519465	1	Hose Barb Reducer 1/2" x 3/8"	-
16	41-01020	34	Hose 3/8" ID	-
17	21-71034	1	Female Swivel, Brs. 3/8 HB x 3/8-37T	-
18	21-20002	1	One Way Valve, Brs. 1/4 NPT x 3.8-37T	-
19	21-51098	1	Street Elbow 90, Brs. 1/4 NPT	-
20	21-79504	1	Adapter, Stl. 1/4 NPT x M22 x 1.5	-
21	16-09501	1	O-Ring	-
22	19-00016	5	Hose Clamp #16 S/S	-
23	19-00008	2	Hose Clamp #8 S/S	-

Ventilating System

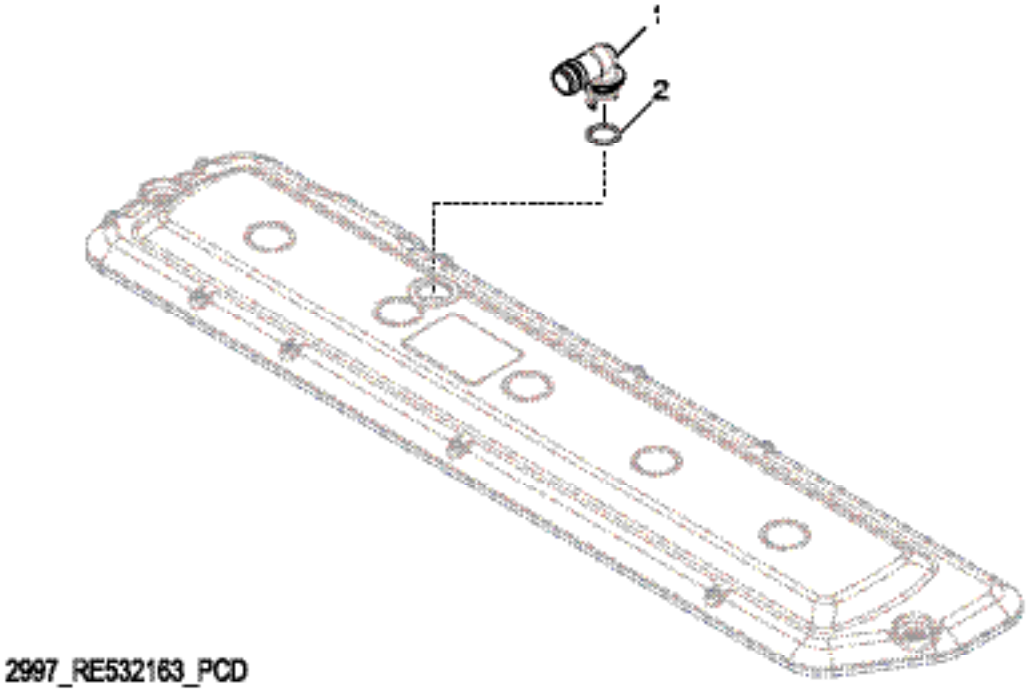

KEY	PART NUMBER	QTY	DESCRIPTION	
1	R120467	1	Elbow Fitting	-
2	16-01000	1	O-Ring	-

Air Intake

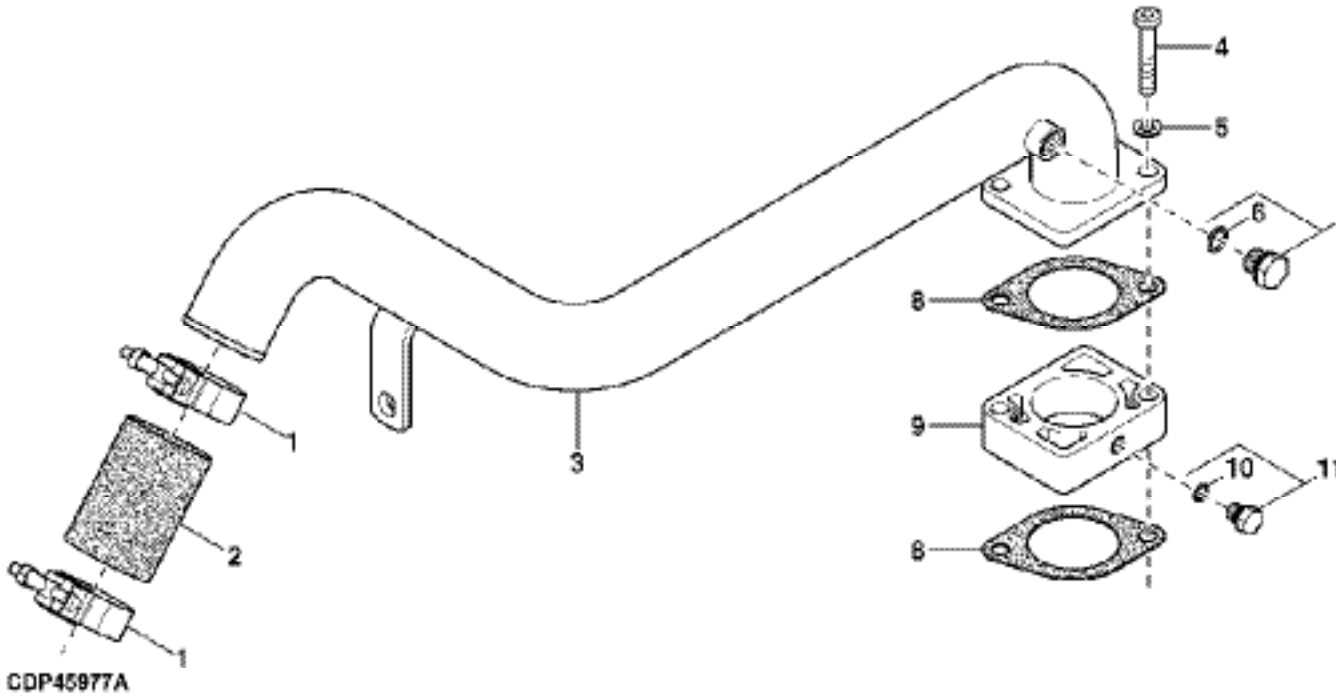

KEY	PART NUMBER	QTY	DESCRIPTION	
1	R110531	2	Clamp	-
2	R518276	1	Hose	-
3	RE520827	1	Air Intake	-
4	19M8412	2	Screw M10 X 55, 10.9, SUB FOR 19M8292; APPL	-
5	24M7096	2	Washer 10.500 X 18 X 1.600 mm	-
6	16-00005	1	O-Ring 11.300 X 2.200 mm	-
7	RE46684	1	Fitting Plug M14 X 1.5	-
8	R81275	2	Gasket	-
9	R501472	1	Spacer USE WITH (2) R81275	-
10	16-00010	1	O-Ring 8.100 X 1.600 mm	-
11	RE60071	1	Fitting M10 X 1	-

Exhaust Manifold

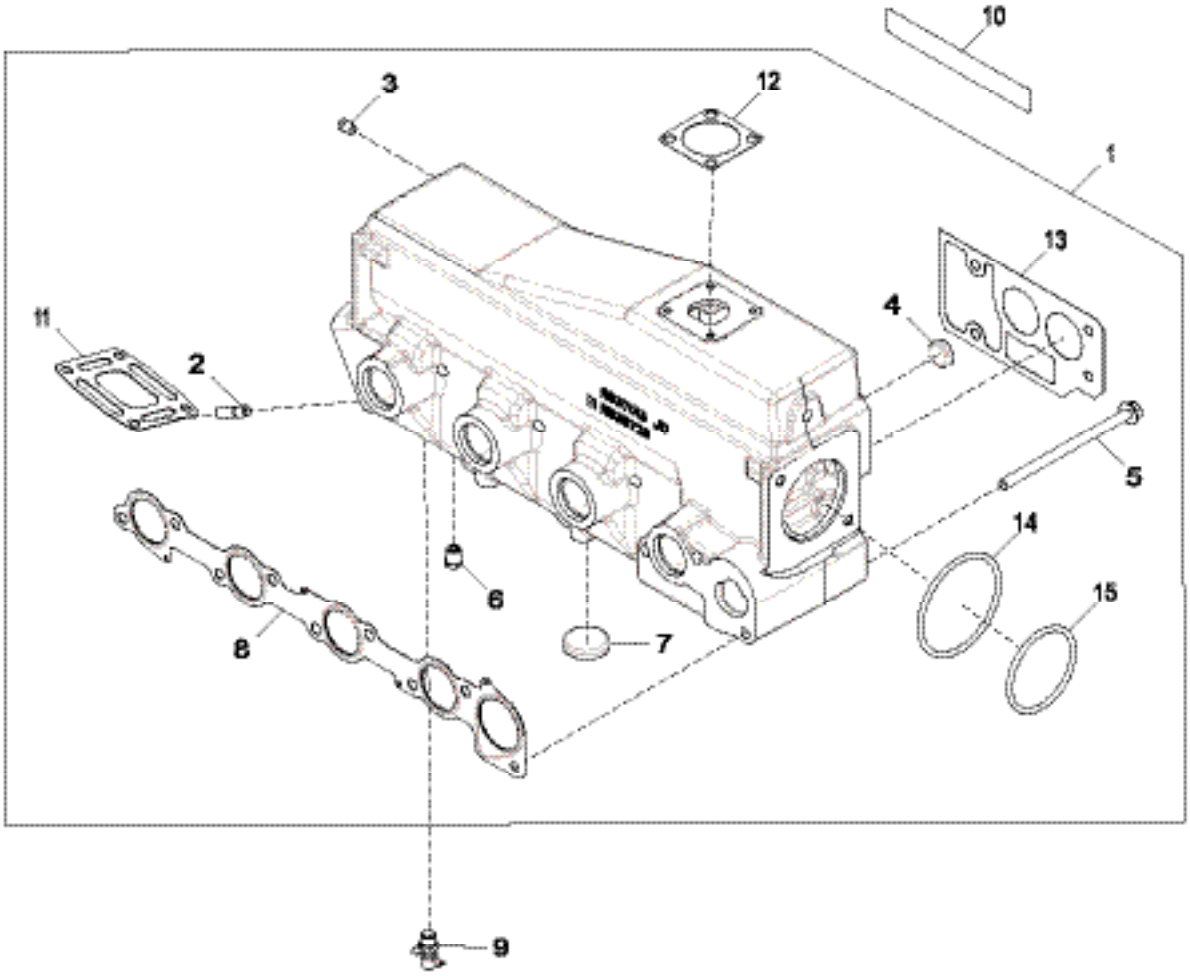

2800_RE566724_PCD

Exhaust Manifold

KEY	PART NUMBER	QTY	DESCRIPTION	SERIAL NUMBER
1	RE554926	1	Manifold Kit	-
2	R501434	4	Stud	-
3	15H638	1	Pipe Plug 1/8"	-
4	N102039	3	Freeze Plug	-
5	19M9017	9	Screw M10 X 165	-
6	RE507807	3	Pipe Plug	-
7	R43409	3	Plug	-
8	RE552056	1	Gasket	-
9	AT13740	1	Drain Valve	-
11	R549173	1	Gasket	-
12	R108848	1	Gasket	-
13	R108730	1	Gasket	-
14	F2576R	2	O-Ring	-

Turbocharger

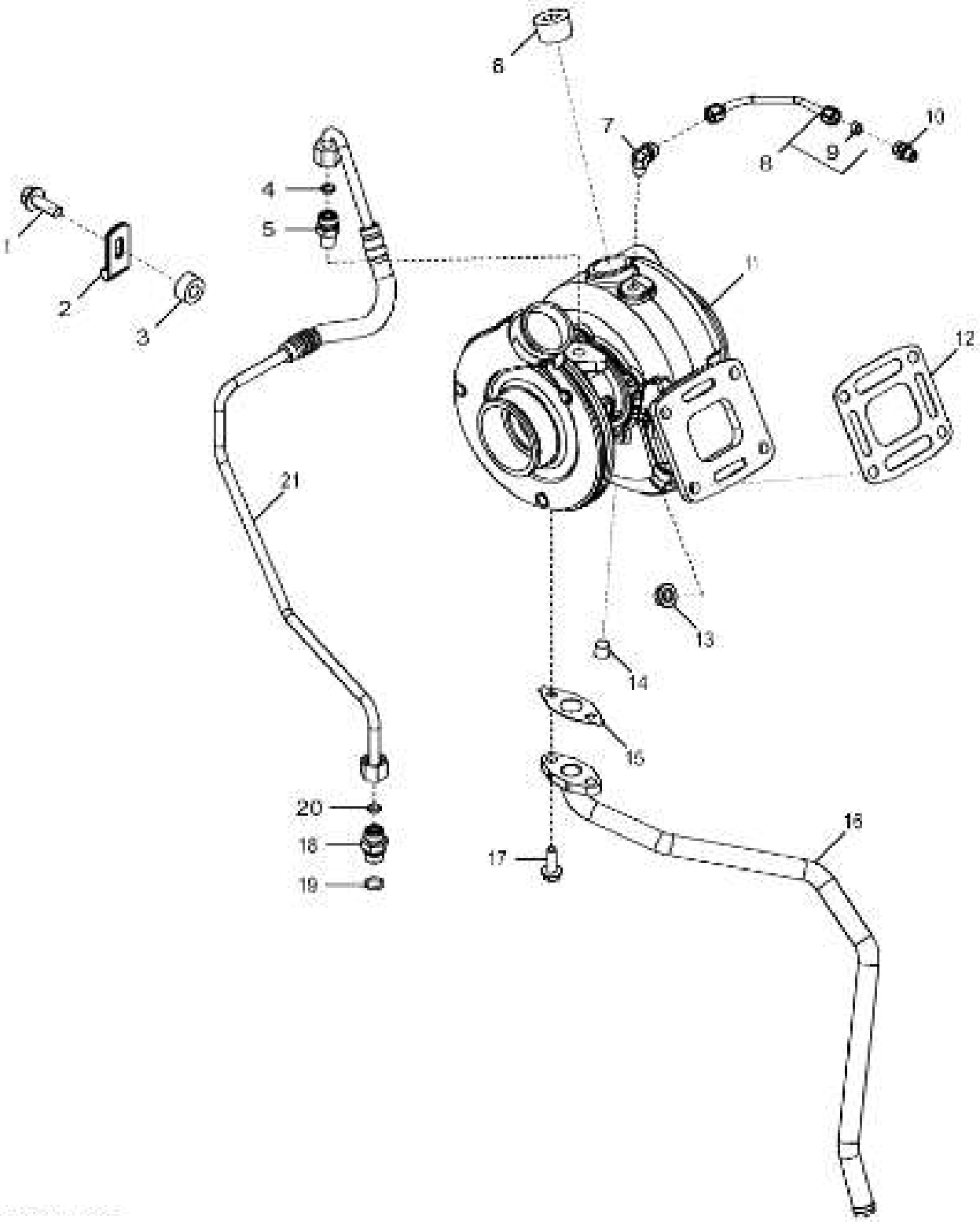

Turbocharger

KEY	PART NUMBER	QTY	DESCRIPTION	SERIAL NUMBER
1	12-80832	1	Screw M10 X 30	-
2	R524925	1	Clip	-
3	R114358	1	Spacer	-
4	R63548	1	O-Ring	-
5	RE55871	1	Elbow Fitting	-
6	15H562	1	Pipe Plug	-
7	R67364	1	Elbow Fitting	-
8	RE502665	1	Tube	-
9	R51936	2	Sealing Washer	-
10	RE502650	1	Fitting	-
11	RE554770	1	Turbocharger	-
12	R108612	1	Gasket	-
13	14-80811	4	Flange Nut M10	-
14	15H65	1	Pipe Plug 1/4"	-
15	R521158	1	Gasket	-
16	RE567766	1	Oil Line	-
17	19M8063	2	Screw M8 x 25	-
18	38H5037	1	Adapter Fitting	-
19	51M7042	1	O-Ring 13.3 x 2.2 mm	-
20	T77613	1	O-Ring	-
21	RE563862	1	Oil Line	

Exhaust Elbow

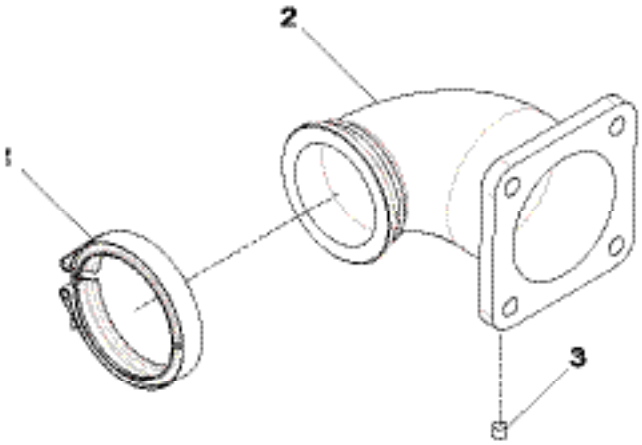

6402_RE49958_PCD

KEY	PART NUMBER	QTY	DESCRIPTION	
1	RE47537	1	Clamp	-
2	R110108	1	Elbow Fitting	-
3	RE71255	1	Pipe Plug	-

Exhaust Elbow

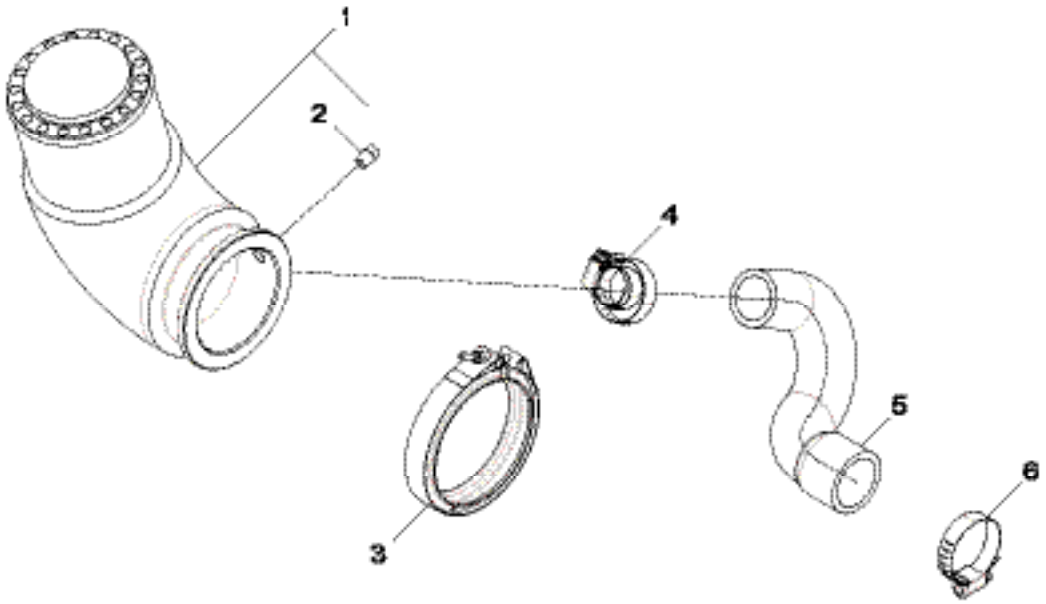

403_RE50015_PCD

KEY	PART NUMBER	QTY	DESCRIPTION	
1	RE506716	1	Elbow Fitting	-
2	15H638	1	Pipe Plug 1/8"	-
3	RE47537	1	Clamp	-
4	19-00020	1	Clamp	-
5	R504046	1	Hose	-
6	19-00032	1	Clamp	-

Heat Exchanger - Standard

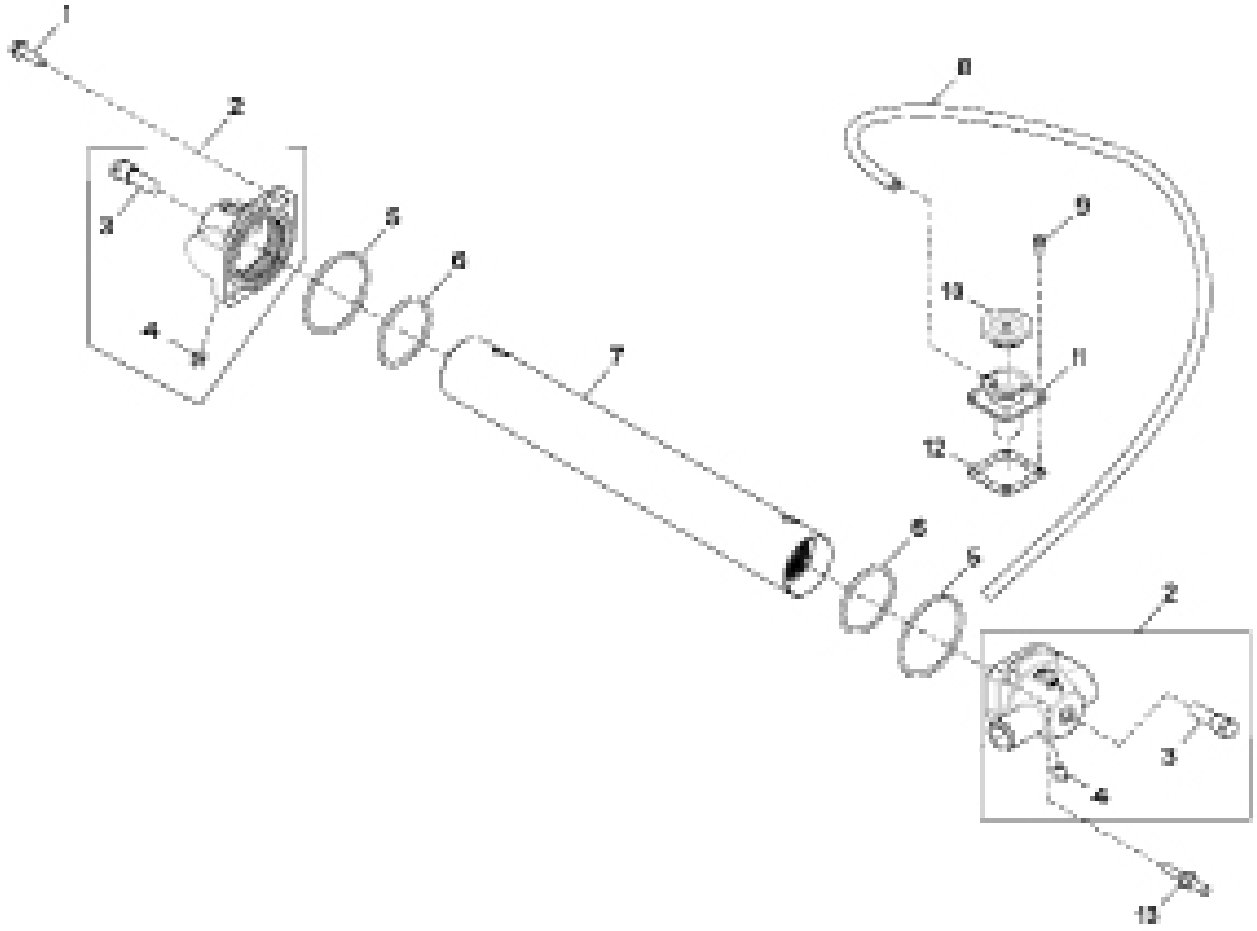

Heat Exchanger - Standard

KEY	PART NUMBER	QTY	DESCRIPTION	SERIAL NUMBER
1	19M7835	2	Screw M10 X 35	-
2	RE550011	2	Cover	-
3	RE54993	2	Fitting Plug	-
4	H26723	1	Drain Plug	-
5	F2576R	2	O-Ring	-
6	F1430R	2	O-Ring	-
7	RE504481	1	Heat Exchanger Element	-
8	R76265	1	Hose	-
9	19M7775	4	Screw M6 X 16	-
10	RE43593	1	Filler Cap	-
11	RE46165	1	Filler Neck	-
12	R108848	1	Gasket	-
13	R531391	2	Stud	-

Heat Exchanger - Keel Cooled Configuration

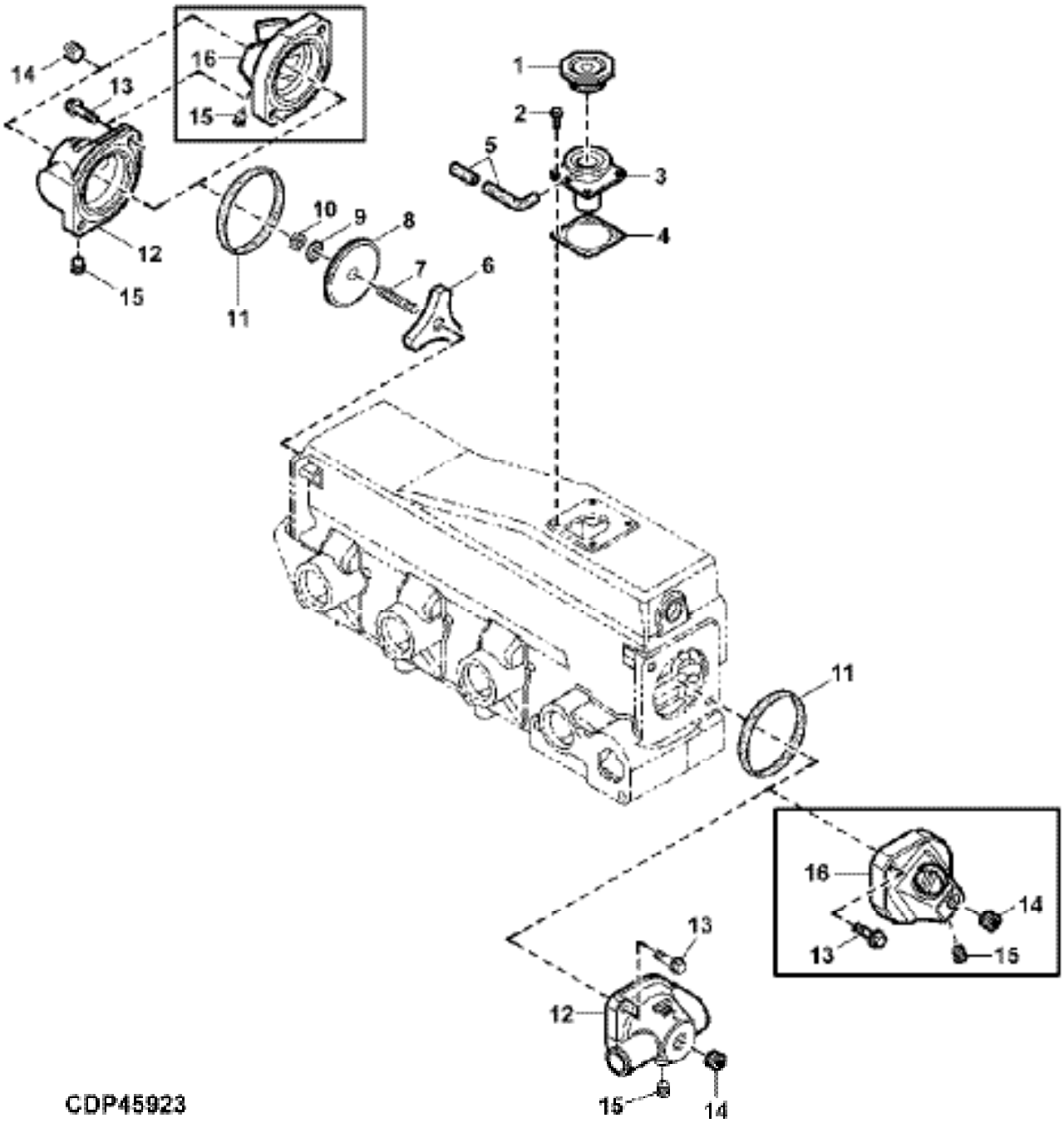

Heat Exchanger - Keel Cooled Configuration

KEY	PART NUMBER	QTY	DESCRIPTION	SERIAL NUMBER
1	RE43593	1	Filler Cap	-
2	19M7775	4	Screw M6 X 16	-
3	RE46165	1	Filler Neck	-
4	R108848	1	Gasket	-
5	41-01013	**	Hose 5/16” ID PVC	-
6	R110248	1	Retainer	-
7	D2420R	1	Stud	-
8	R110247	1	Plug	-
9	24M7106	1	Washer 10 X 18 X 2.500 mm	-
10	N10215	1	Lock Nut 9.525 mm (3/8")	-
11	F2576R	2	O-Ring 97.790 X 5.334 mm (3.850" X 0.210")	-
12	RE550011	2	Cover	-
13	19M7835	4	Screw M10 X 35	-
14	RE57836	2	Pipe Plug 12.7 mm (1/2") *	-
15	H26723	2	Drain Plug 6.35 mm (1/4")	-
16	RE54994	2	End Cover	-

* Threads With Pre-Applied Sealant
** As Required

Heat Exchanger Hose Assembly

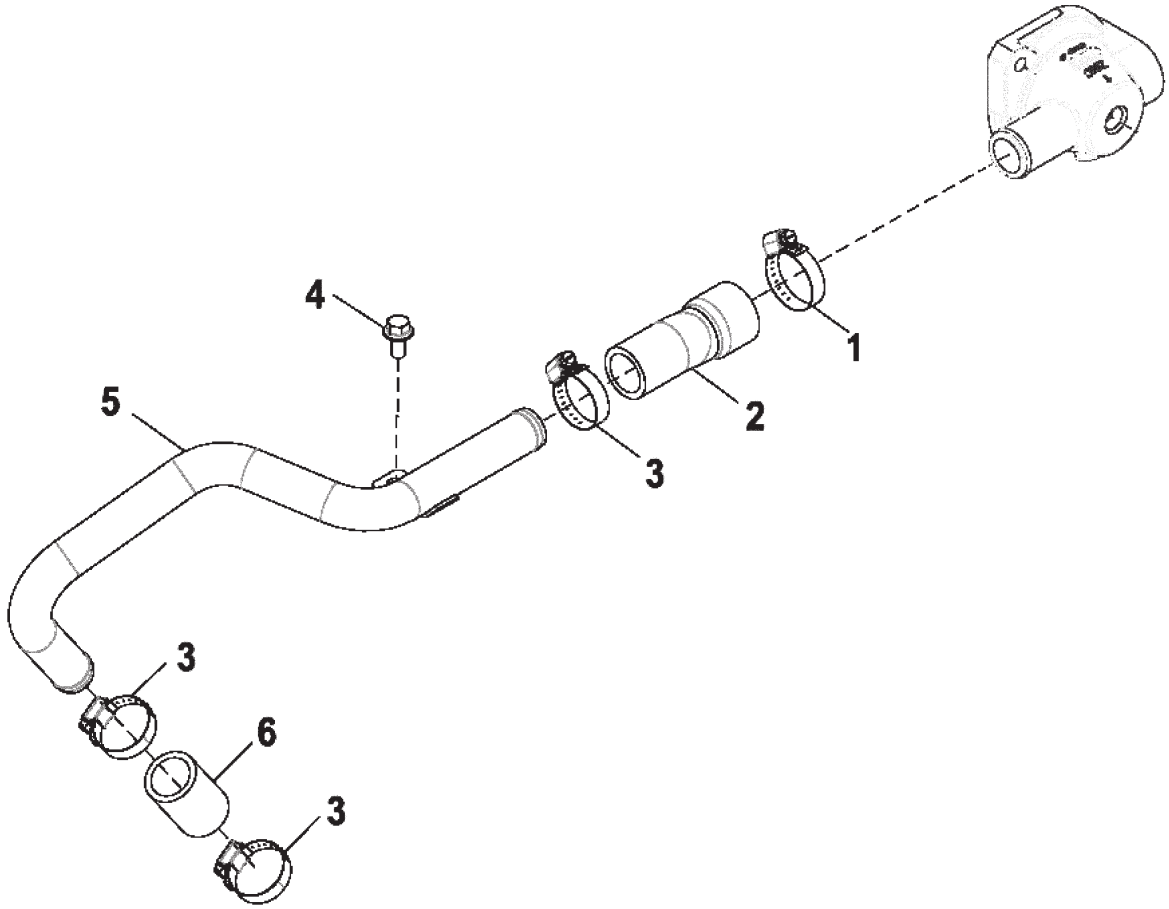

Heat Exchanger Hose Assembly

KEY	PART NUMBER	QTY	DESCRIPTION	SERIAL NUMBER
1	AR21840	1	Hose Clamp	-
2	R537829	1	Hose	-
3	19-00020	3	Hose Clamp #20	-
4	19M7784	1	Screw M10 X 20	-
5	RE555324	1	Tube	-
6	41-01071	3"	Hose 1-1/4" ID	-

Thermostat Cover

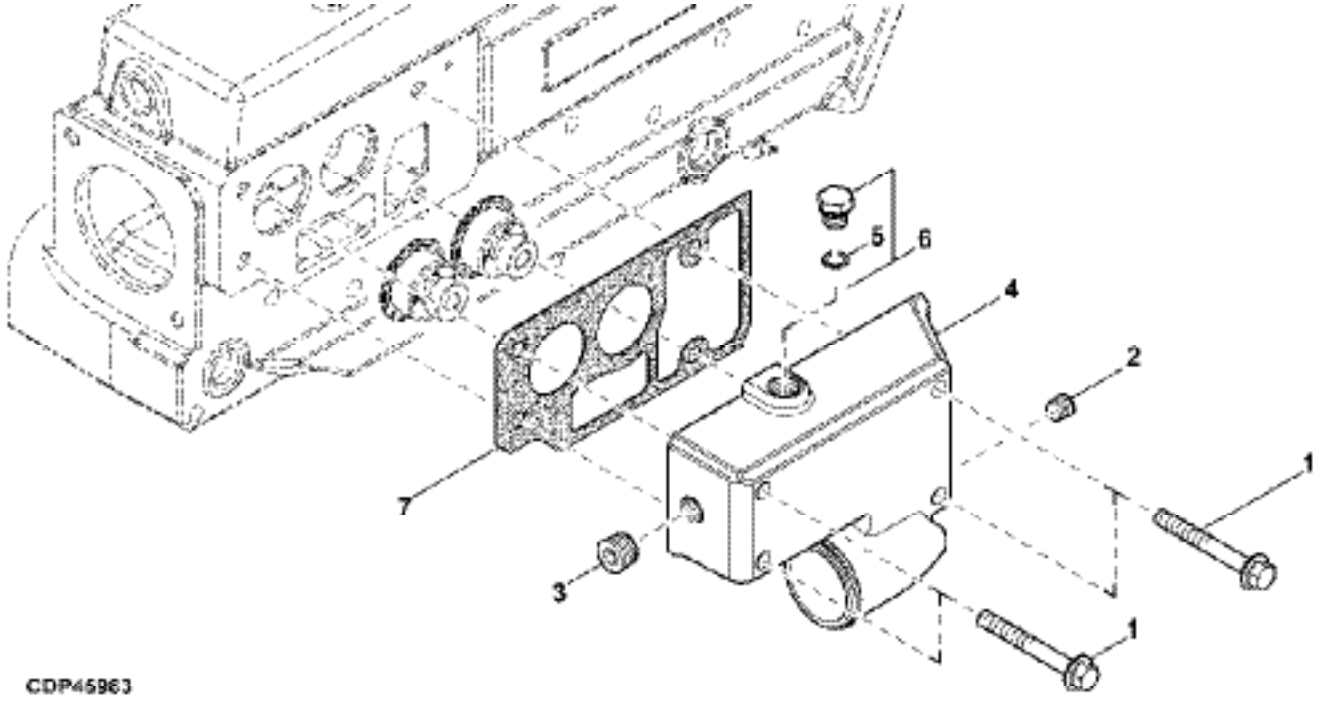

KEY	PART NUMBER	QTY	DESCRIPTION	
1	12-80049	4	Screw M10 X 80	-
2	15H695	1	Plug 3/8" NPT	-
3	RE57836	1	Plug 1/2" NPT *	-
4	R518477	1	Thermostat Housing	-
	10-19403	1	Thermostat Housing (modified with extra parts)	-
5	16-00005	1	O-Ring	-
6	RE46684	1	Plug M14 X 1.5	-
7	R108730	1	Gasket	-

* Threads With Pre-Applied Sealant

Thermostat

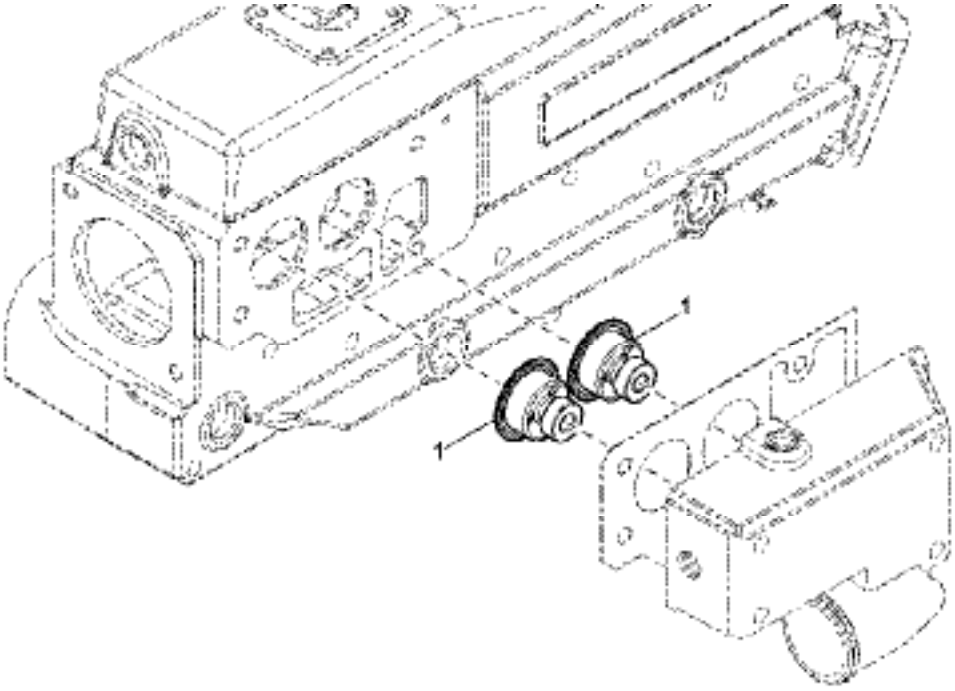

KEY	PART NUMBER	QTY	DESCRIPTION	
1	AR48675	2	Thermostat 82°C 173-186°F	-

Coolant Pump Inlet

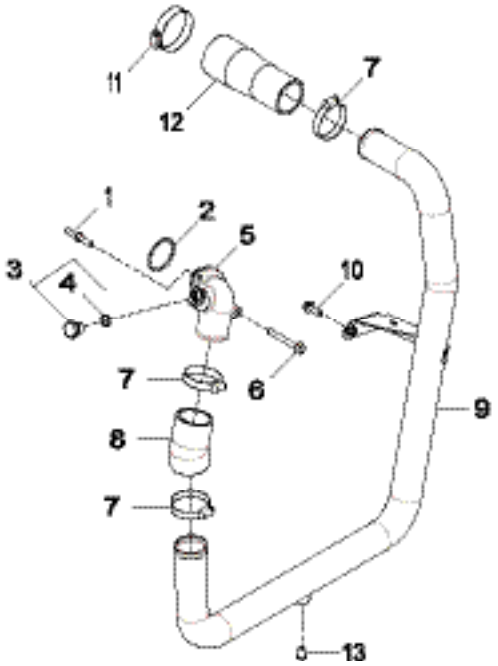

5740_RE550377_PCD

KEY	PART NUMBER	QTY	DESCRIPTION	
1	R501462	1	Stud	-
2	R89944	1	O-Ring	-
3	RE46685	1	Fitting Plug	-
4	16-09503	1	O-Ring 15.3 X 2.2 mm	-
5	R502983	1	Water Pump Connection	-
6	19M7802	1	Screw M8 X 65	-
7	AR65294	3	Clamp	-
8	R519500	1	Hose	-
9	RE554161	1	Tube	-
10	19M7867	1	Screw M8 X 25	-
11	RE40436	1	Clamp	-
12	T27104	1	Radiator Hose	-
13	15H604	1	Pipe Plug 1/4"	-

Coolant Pump Pulley

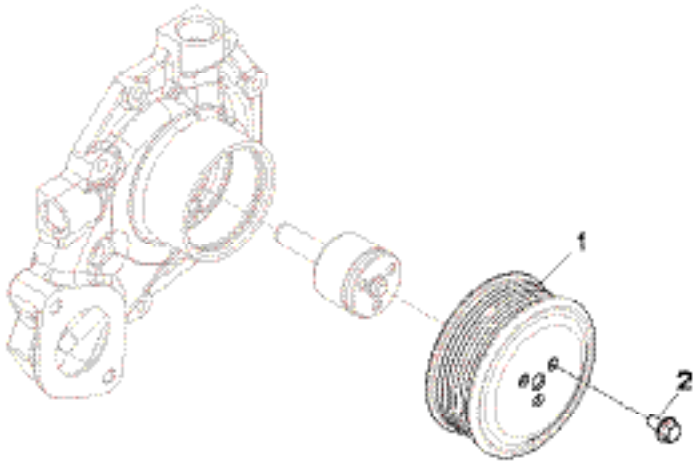

2001_RE58175_PCD

KEY	PART NUMBER	QTY	DESCRIPTION	
1	R115250	1	Pulley 94mm OD	-
2	19M7774	3	Screw M6 x 12mm	-

Raw Water Pump

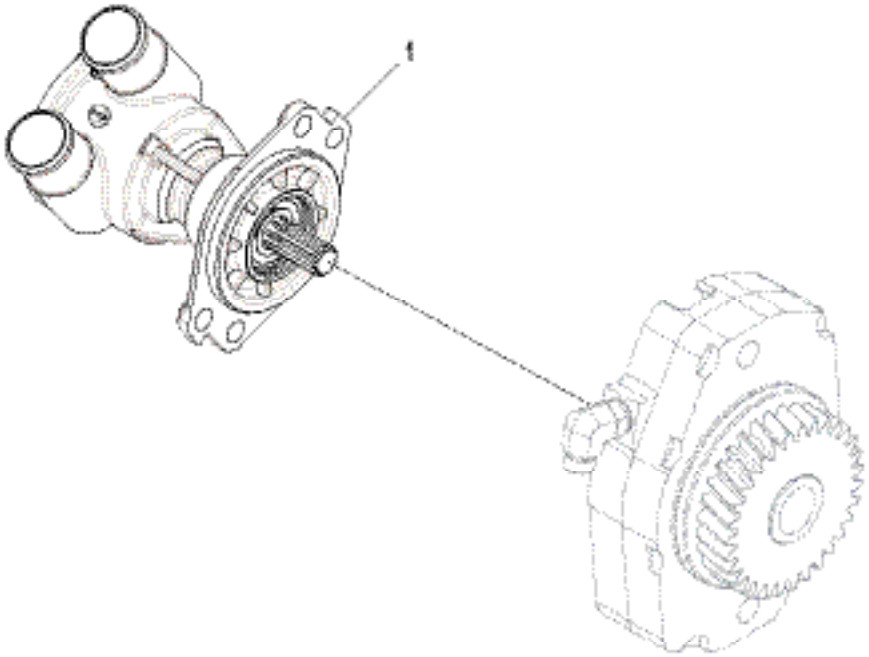

8020_RE502546_PCD

KEY	PART NUMBER	QTY	DESCRIPTION	SERIAL NUMBER
1	DZ116559	1	Raw Water Pump (See Parts Detail)	-

Raw Water Pump Assembly

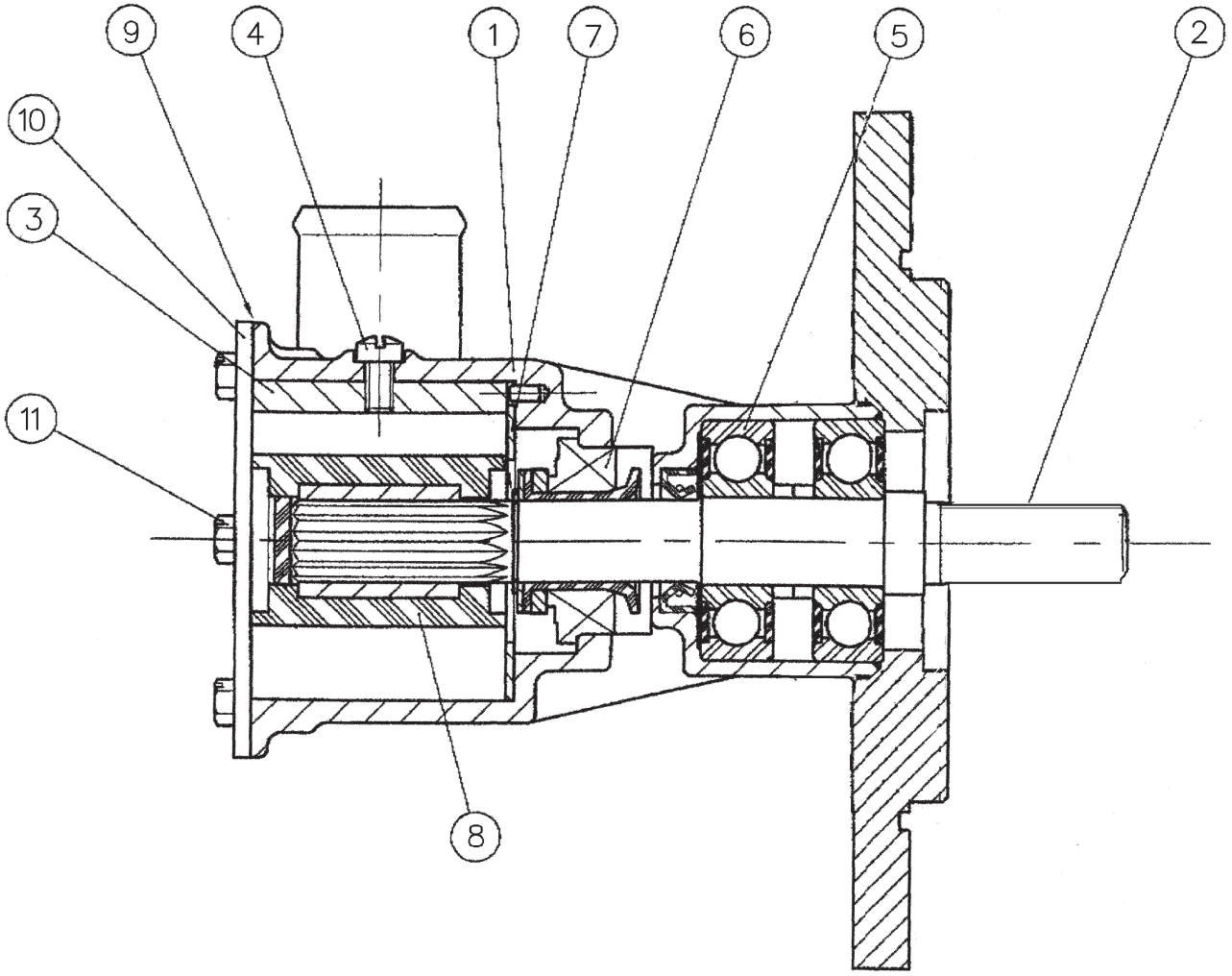

KEY	PART NUMBER	QTY	DESCRIPTION	SERIAL NUMBER
•	DZ116559	1	Raw Water Pump Assembly (Includes all keys)	-
••	25-19410		Repair Kit (Includes keys #3-8 & 10-11)	-
1			Housing	-
2	25-19401	1	Shaft	-
3	25-19402	1	Cam	-
4	25-11036	1	Screw	-
5	25-11034	2	Bearing	-
6	25-15036	1	Seal, Mechanical/ Carbon	-
7	25-19404	1	Wear Plate	-
8	25-11011	1	Impeller with Gasket	-
9	25-11017	1	Gasket	-
10	25-19403	1	End Cover	-
11	25-19405	6	Screw	-

Oil Cooler

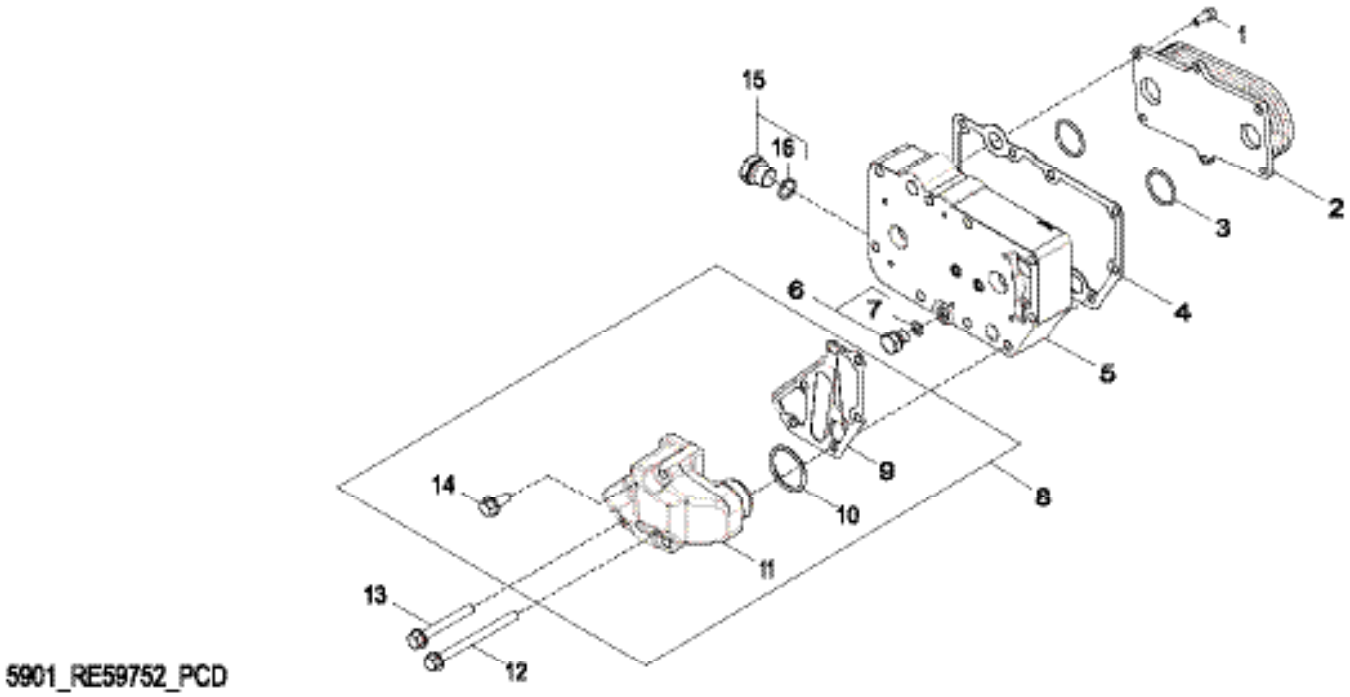

KEY	PART NUMBER	QTY	DESCRIPTION	SERIAL NUMBER
1	RE67231	6	Screw M6 X 16 *	-
2	RE560753	1	Oil Cooler **	-
3	T122075	2	O-Ring 29.820 X 2.616 mm (1.174" X 0.103")	-
4	R123501	1	Gasket	-
5	R123471	1	Housing	-
6	RE46686	1	Fitting Plug M12 X 1.5	-
7	16-00012	1	O-Ring 9.300 X 2.200 mm	-
8	RE508599	1	Adapter Fitting	-
9	R501428	1	Gasket	-
10	16-45401	1	O-Ring 37.694 X 3.531 mm (1-31/64" X 0.139")	-
11	.....	1	Intermediate Housing	-
12	19M7802	2	Screw M8 X 65	-
13	19M7970	2	Screw M8 X 100	-
14	RE67238	1	Screw M8 X 20 *	-
15	RE46685	1	Fitting Plug M18 X 1.5	-
16	16-09500	1	O-Ring 115.300 X 2.200 mm	-
			* Threads with Pre Applied Sealant	
			** 5 Plates	

Notes

Thermostat Housing Kit & Coolant Bypass

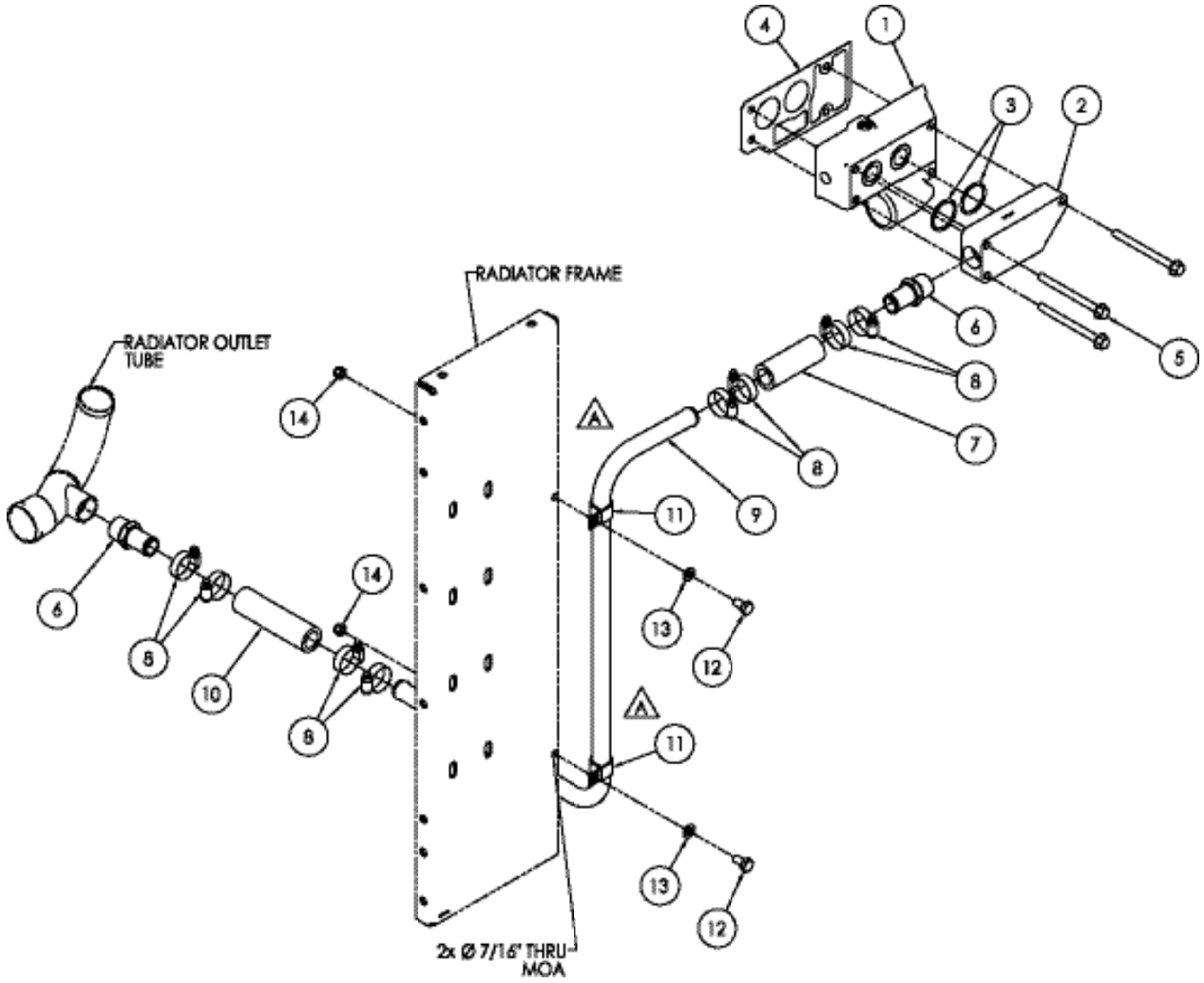

Thermostat Housing Kit & Coolant Bypass

KEY	PART NUMBER	QTY	DESCRIPTION	SERIAL NUMBER
1	10-19406	1	Thermostat Housing	-
2	10-19407	1	Thermostat Cover	-
3	16-00003	2	O-Ring 1-5/8"ID X 1/8" Nitrile	-
4	R108730	1	Gasket, Thermostat Housing	-
5	19M7944	3	Cap Screw,Hex Head Flanged M10x1.5 X 120mm Grade 10.9	-
6	21-19403	2	Male Connector Steel 1"NPT X 1"HB	-
7	41-01066	4	Hose 1"ID 1-Ply Silicone SAE J20 R3 -65F/+350F Flexible	-
8	19-01016	8	Hose Clamp #16 Extended Band S/S (316) 1" Min X 1-1/2" Max	-
9	27-19412	1	Tube, Coolant Bypass	-
10	41-01066	5.5	Hose 1"ID 1-Ply Silicone SAE J20 R3 -65F/+350F Flexible	-
11	19-71029	2	Adelle Clamp 1"ID X 3/8" Stud	-
12	12-00821	2	Cap Screw, Hex Head M10x1.5 X 20mm S/S (316)	-
13	15-00805	2	Flat Washer M10 DIN Code 125-A	-
14	14-00812	2	Hex Nut, Nylock M10x1.5 Property Class 8	-

Fuel Injection System

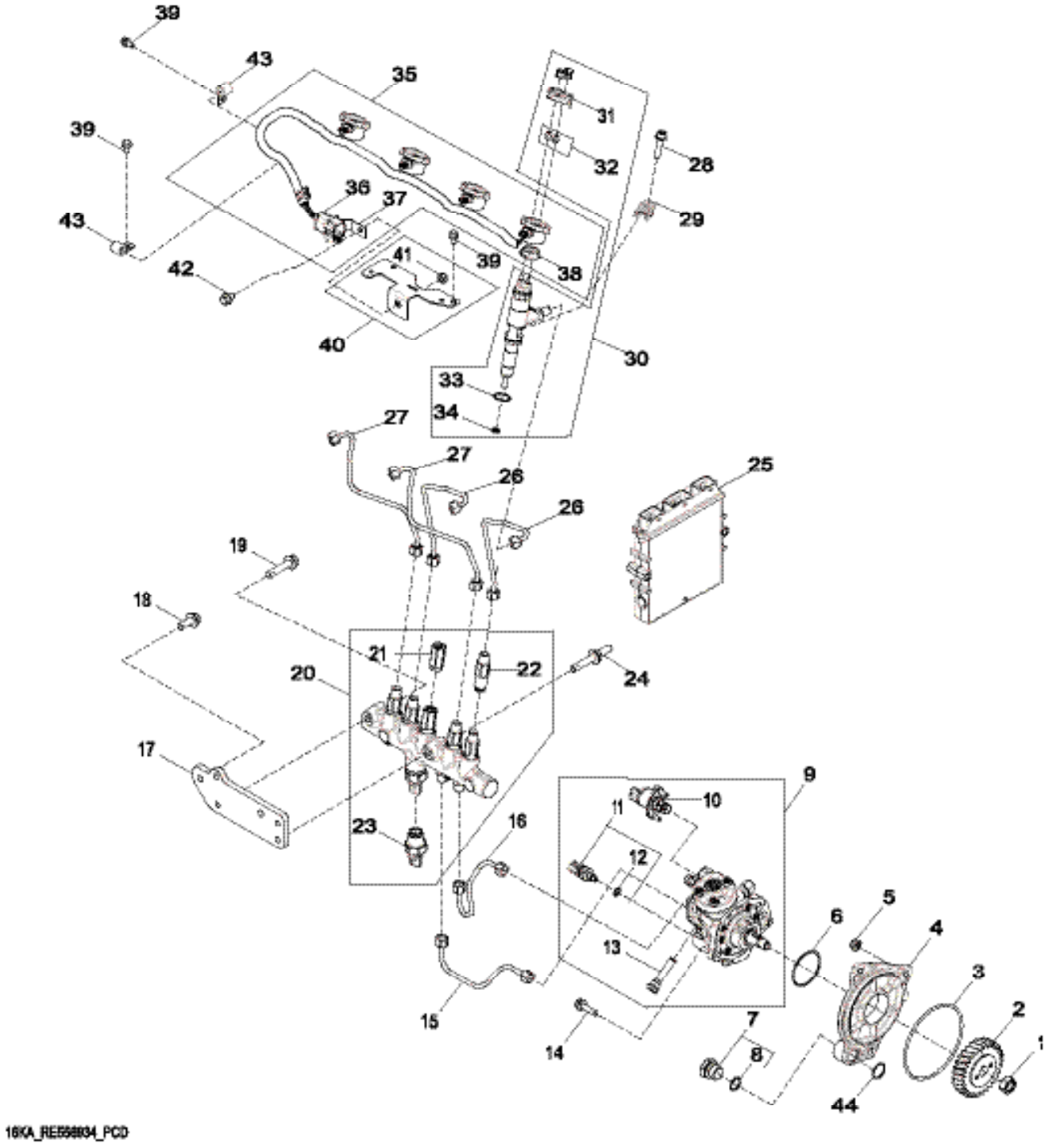

Fuel Injection System

KEY	PART NUMBER	QTY	DESCRIPTION	SERIAL NUMBER
1	R91360	1	Nut	-
2	R502541	1	Gear	-
3	R55453	1	O-Ring	-
4	R504577	1	Adapter Fitting	-
5	14M7298	3	Flange Nut M8	-
6	R516125	1	O-Ring	-
7	RE517370	1	Fitting	-
8	51M7044	1	O-Ring 17.300 X 2.200 mm	-
9	R507959	1	Fuel Injection Pump	-
	SE501916	1	Fuel Injection Pump Reman for RE527528	-
10	DZ111137	1	Control Valve	-
11	RE516336	1	Fuel Temperature Sensor	-
12	R524234	1	O-Ring	-
13	RE516999	1	Screen	-
14	12-80753	2	Screw M8 X 30 mm	-
15	RE544263	1	Fuel Line	-
16	DZ104988	1	Fuel Line	-
17	R522498	1	Bracket	-
18	19M7785	2	Screw M10 X 25 mm	-
19	19M8320	1	Screw M10 X 45 mm	-
20	RE520929	1	Rail	-
21	RE516335	1	Pressure Relief Valve	-
22	RE515636	4	Restrictor	-
23	RE520930	1	Sensor	-
24	R525863	1	Stud	-
25	26-9940300665	1	Engine Controller	-
26	RE526692	2	Fuel Line	-
27	RE526693	2	Fuel Line	-
28	RE528096	4	Screw With Washer	-
29	R520813	4	Clamp	-
30	DZ100211	4	Nozzle Kit Includes R522899	-
	SE501928	4	Injection Nozzle Reman for RE546783	-
31	RE528588	4	Electrical Connector Cap	-
32	R134920	8	Nut	-
33	R516647	4	O-Ring	-
34	R523499	4	Washer	-
35	RE528590	1	Wiring Harness	-
36	57M8747	1	Elec. Connector Housing	-
37	R520930	1	Bracket	-
38	R522630	1	Seal	-
39	RE527858	4	Screw	-
40	R523048	1	Bracket	-
41	14M7233	1	Weld Nut M8	-
42	RE524730	1	Cap Screw	-
43	AH80916	2	Clip	-
44	R116031	1	O-Ring	-

Low Pressure Fuel Lines

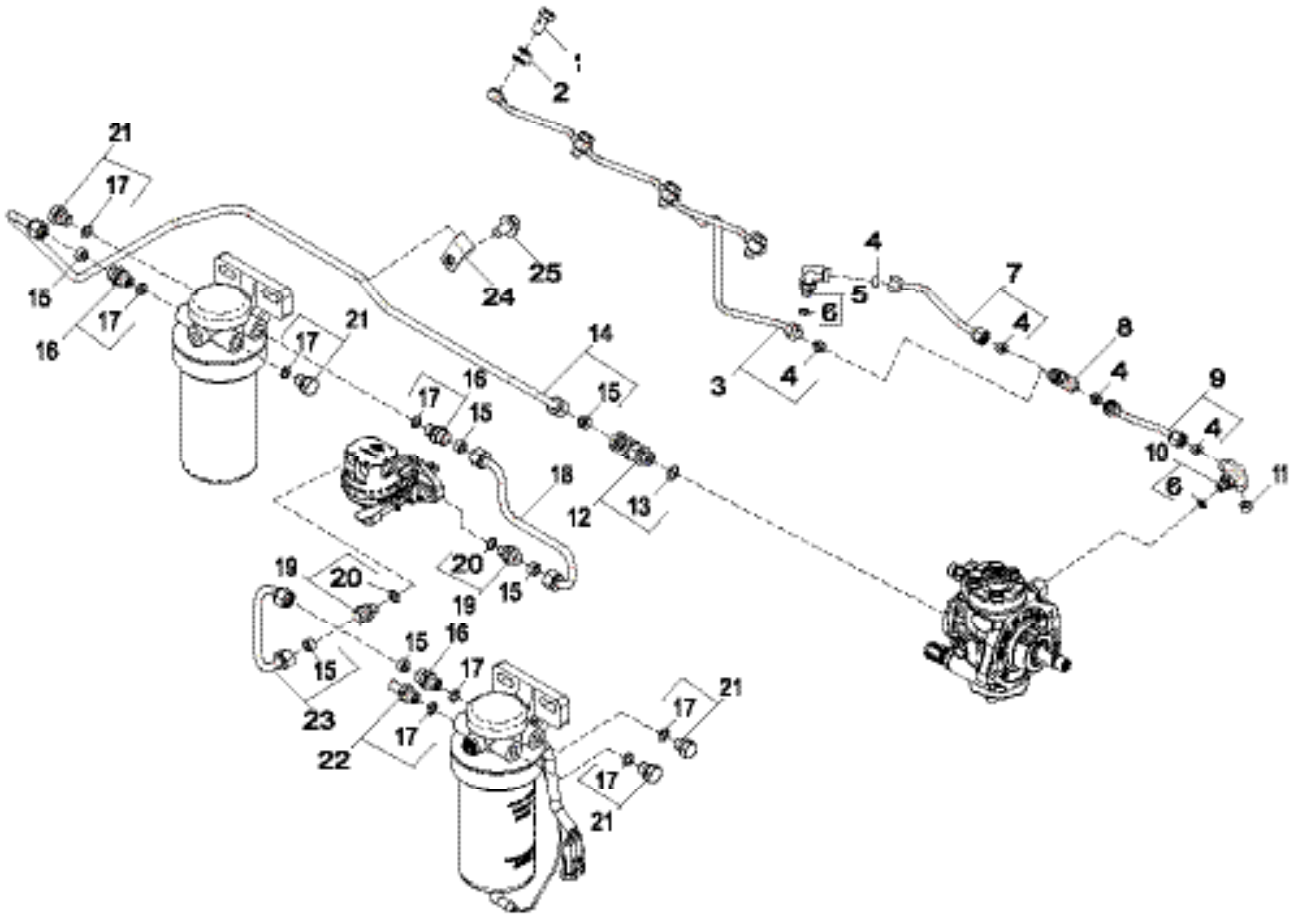

63DP_RE550378_PCD

Low Pressure Fuel Lines

KEY	PART NUMBER	QTY	DESCRIPTION	SERIAL NUMBER
1	38M7009	4	Hollow Screw	-
2	R522899	4	Sealing Washer	-
3	RE551784	1	Fuel Line	-
4	R51936	5	Sealing Sleeve	-
5	RE502173	1	Fitting	-
6	16-00010	2	O-Ring 8.1 X 1.6 mm	-
7	RE550723	1	Fuel Line	-
8	R97061	1	Tee Fitting	-
9	RE550742	1	Fuel Line	-
10	RE524220	1	Fitting	-
11	AR85519	1	Plug	-
12	RE525782	1	Elbow Fitting	-
13	16-00005	1	O-Ring 11.3 X 2.2 mm	-
14	RE525786	1	Fuel Line	-
15	R74012	6	Sealing Sleeve	-
16	RE60029	3	Adapter Fitting	-
17	16-00012	8	O-Ring 9.3 X 2.2 mm	-
18	RE515360	1	Fuel Line	-
19	DZ113063	2	Fitting	-
20	R500271	2	O-Ring	-
21	RE46686	4	Fitting Plug	-
22	RE500576	1	Fitting	-
23	RE530620	1	Fuel Line	-
24	R135106	1	Clamp	-
25	19M7783	1	Screw M10 X 16 mm	-

Fuel Filter / Water Separator Assembly

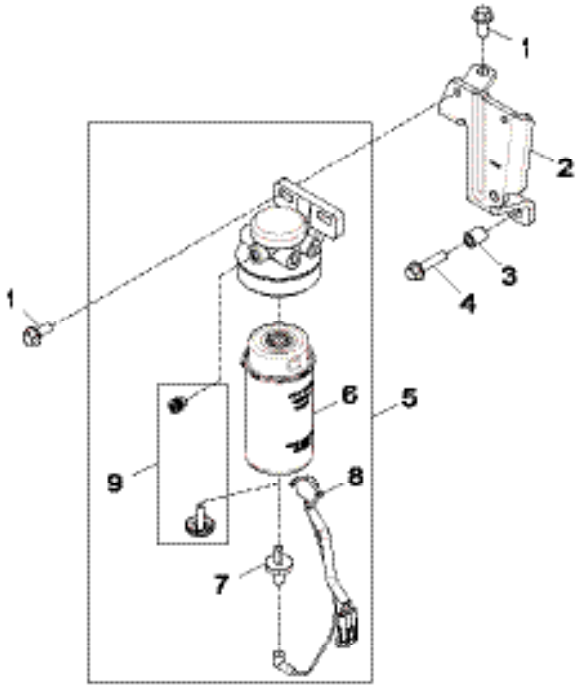

81BK_RE550425_PCD

KEY	PART NUMBER	QTY	DESCRIPTION	SERIAL NUMBER
1	19M7785	3	Screw M10 X 25 mm	-
2	R542834	1	Bracket	-
3	28H2522	1	Spacer 0.423" X 0.675" X 13/16"	-
4	19M7805	1	Screw M10 X 45 mm	-
5	RE521539	1	Filter	-
6	RE521540	1	Fuel Filter	-
7	DZ111858	1	Drain Valve	-
8	RE509677	**	Wire Harness, 12 Volt *	-
	RE509678	**	Wire Harness, 24 Volt *	-
9	RE60854	1	Valve Kit	-

* Used on units with Standard Ground Electrical Systems

Low Pressure Fuel Lines

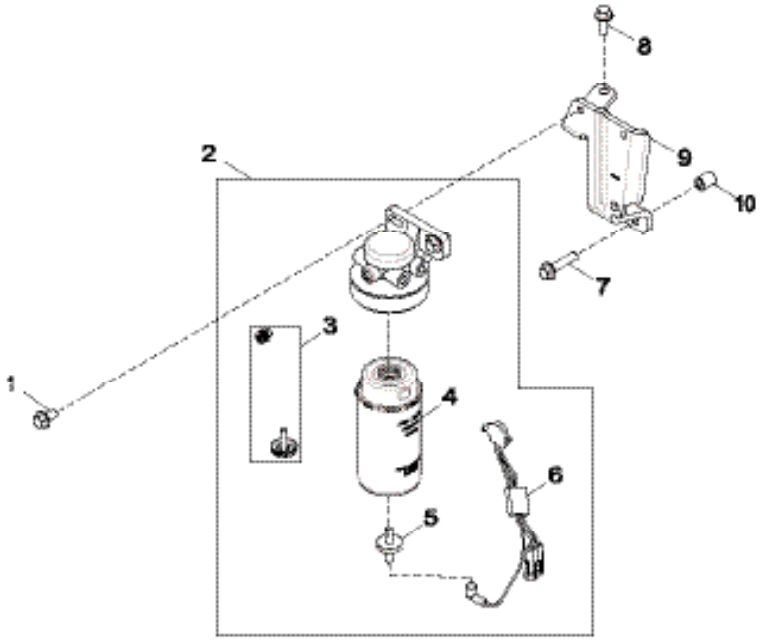

KEY	PART NUMBER	QTY	DESCRIPTION	SERIAL NUMBER
1	19M7784	2	Screw M10 X 2 0mm	-
2	RE521541	1	Fuel Filter	-
3	RE60854	1	Valve Kit	-
4	DZ111858	1	Fuel Filter	-
5	RE54723	1	Drain Valve	-
6	RE509678	1	Wiring Harness, 24 Volt	-
7	19M7805	1	Screw M10 X 45 mm	-
8	19M7785	1	Screw M10 X 25 mm	-
9	R542834	1	Bracket	-
10	28H2522	1	Spacer 0.423" X 0.675" X 13/16"	-

Fuel Filter Assembly

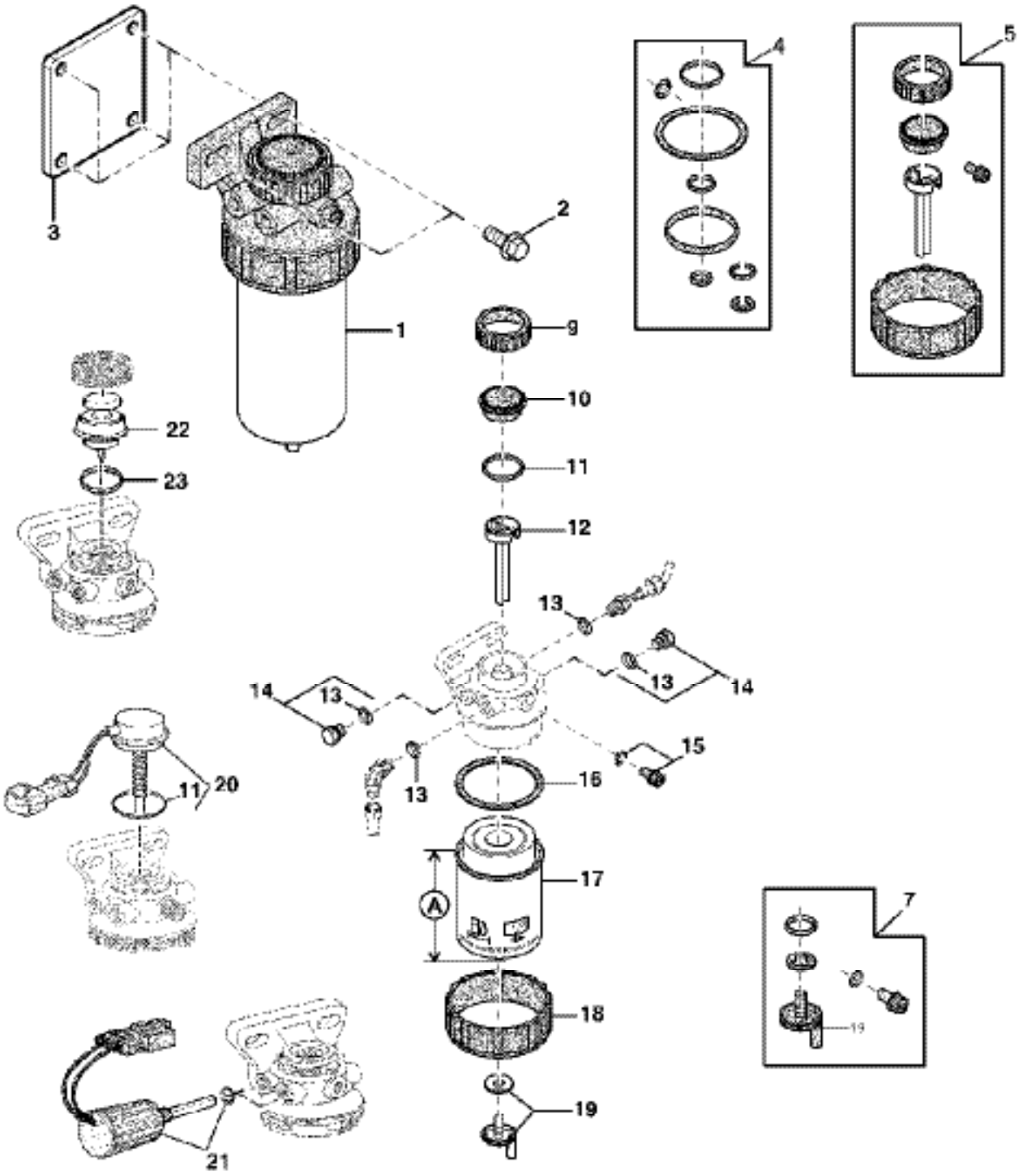

Fuel Filter

KEY	PART NUMBER	QTY	DESCRIPTION	SERIAL NUMBER
1	RE521537	1	Fuel Filter Assembly	-
2	19M7784	4	Screw M10 X 20	-
3	R505601	1	Bracket	-
4	RE516553	**	Seal Kit	-
5	RE526834	**	Repair Kit	-
7	RE60854	**	Valve Kit	-
9	.....	1	Retainer *	-
10	.....	1	Retainer *	-
11	RE516512	1	O-Ring Kit	-
12	.....	1	Retainer *	-
13	16-00012	**	O-Ring	-
14	RE46686	**	Fitting Plug M12 X 1.5	-
15	.....	1	Drain Plug *	-
16	R113565	1	O-Ring	-
17	RE521538	1	Filter Element (Includes #19)	-
18	.....	1	Retainer *	-
19	24-51006	1	Valve	-
20	RE51648	**	Heat Exchanger	-
21	RE503524	**	Heater 12 VOLT, 100W	-
22	RE50467	**	Hand Primer	-
23	RE516513	**	O-ring Kit	-

* Items not sold separately
** As Required

USCG A-1 SAE J1942 ABS Fuel Lines (M50T13-M65T13)

PLUMBED TO BASE FRAME

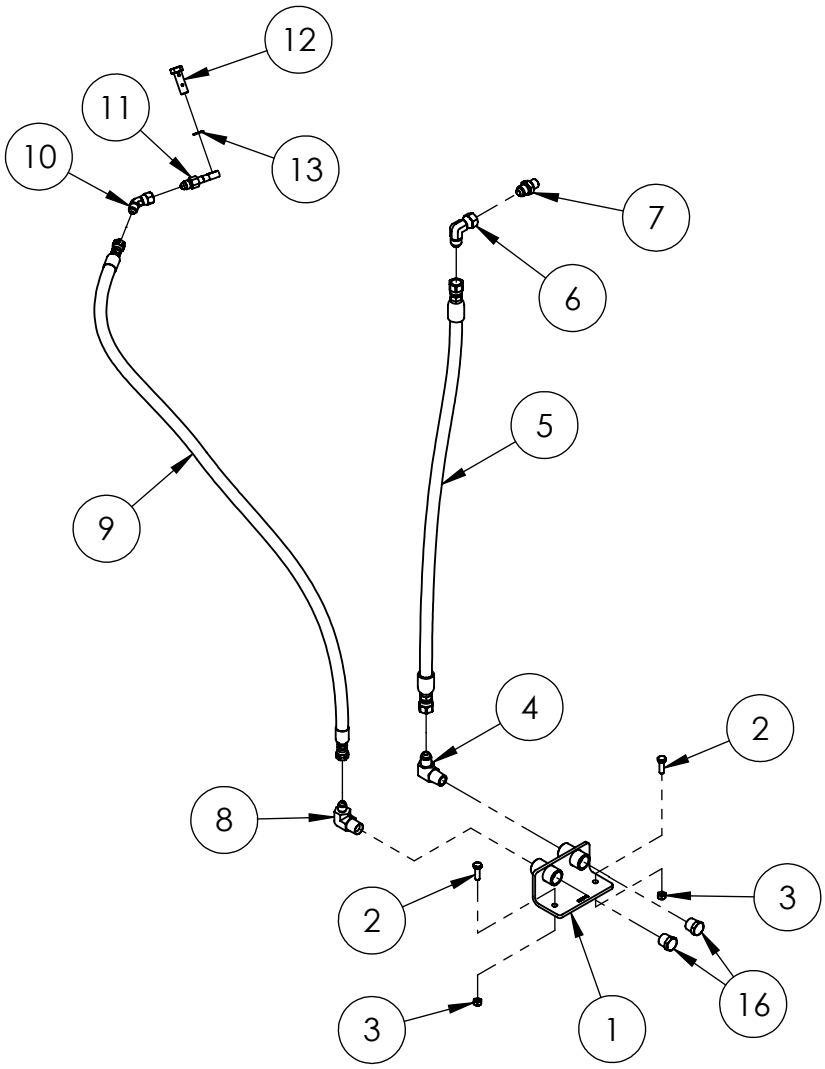

A-12974

KEY	PART NUMBER	QTY	DESCRIPTION	SERIAL NUMBER
1	10-51098	1	Manifold	-
2	12-01131	2	Capscrew, Hex Head M6 x 1.0 x 20mm	-
3	14-04803	2	Hex Nut, Nylock M6 x 1.0 Class 8	-
4	21-00606	1	Male Elbow 90 Stl. 3/8 NPT x 3/8-37T	-
5	18-59614	1	Hose Assy 5/16"ID x 29" 3/8FMS x 3/8FMS USCG A-1 SAE J1942 ABS	-
6	21-52213	1	Elbow 90 Swivel, Stl. 3/8-37T	-
7	21-59508	1	Male Connector, Stl. 3/8-37T x M12 x 1.5	-
8	21-51601	1	Male Elbow 90 Stl. 3/8NPT x 1/4-37T	-
9	18-59413	1	Hose Assy 3/16"ID x 35" 1/4FMS x 1/4FMSUSCG A-1 SAE J1942 ABS	-
10	21-00113	1	Elbow, 45 Swivel, Stl. 1/4-37T	-
11	21-59532	1	Banjo Ftg. Stl. 10mmID x 1/4-37T Male	-
12	21-59531	1	Banjo Bolt M10 x 1.0 x30mm Double Length	-
13	131426180	3	Sealing Washer, Copper M10	-
16	21-31003	2	Plug Hex Head, Brs. 3/8NPT	-

Fuel Transfer Pump

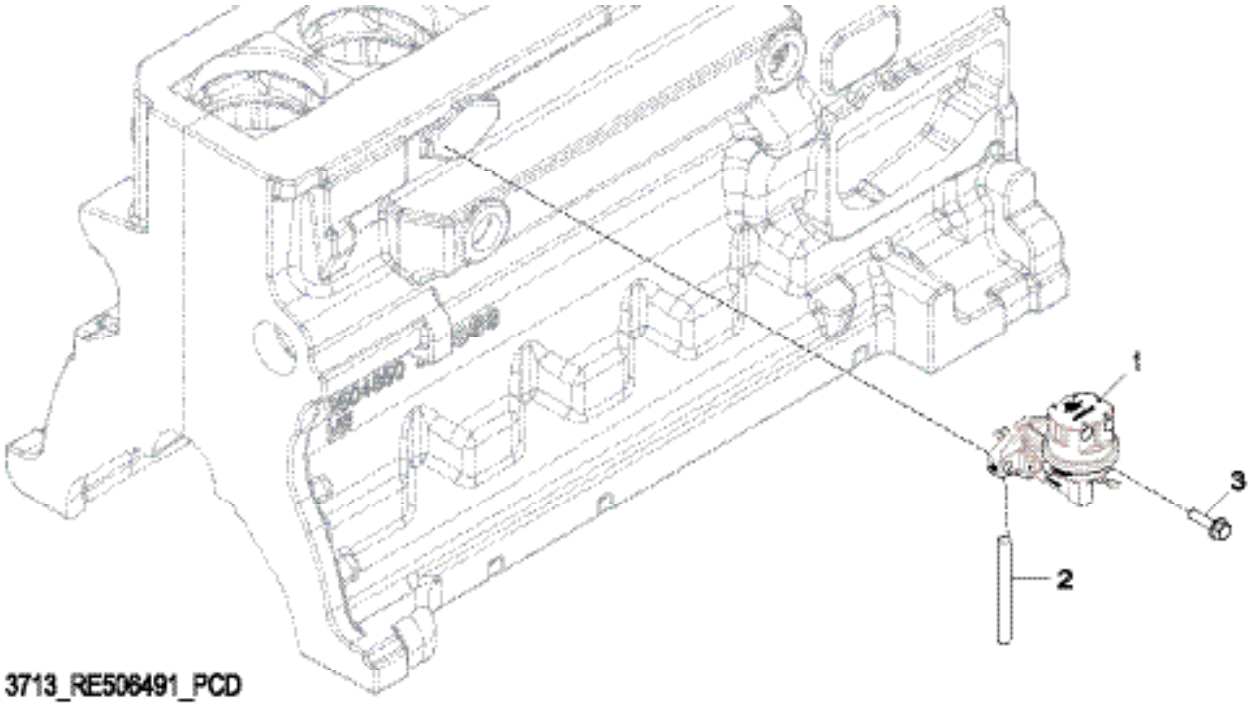

KEY	PART NUMBER	QTY	DESCRIPTION	SERIAL NUMBER
1	RE517230	1	Fuel Pump INCLUDES R123273	-
2	R133405	1	Pin	-
3	RE504233	2	Cap Screw	-
..	R123273	1	O-Ring	-

Fuel Return Connection (M50T13-M65T13)

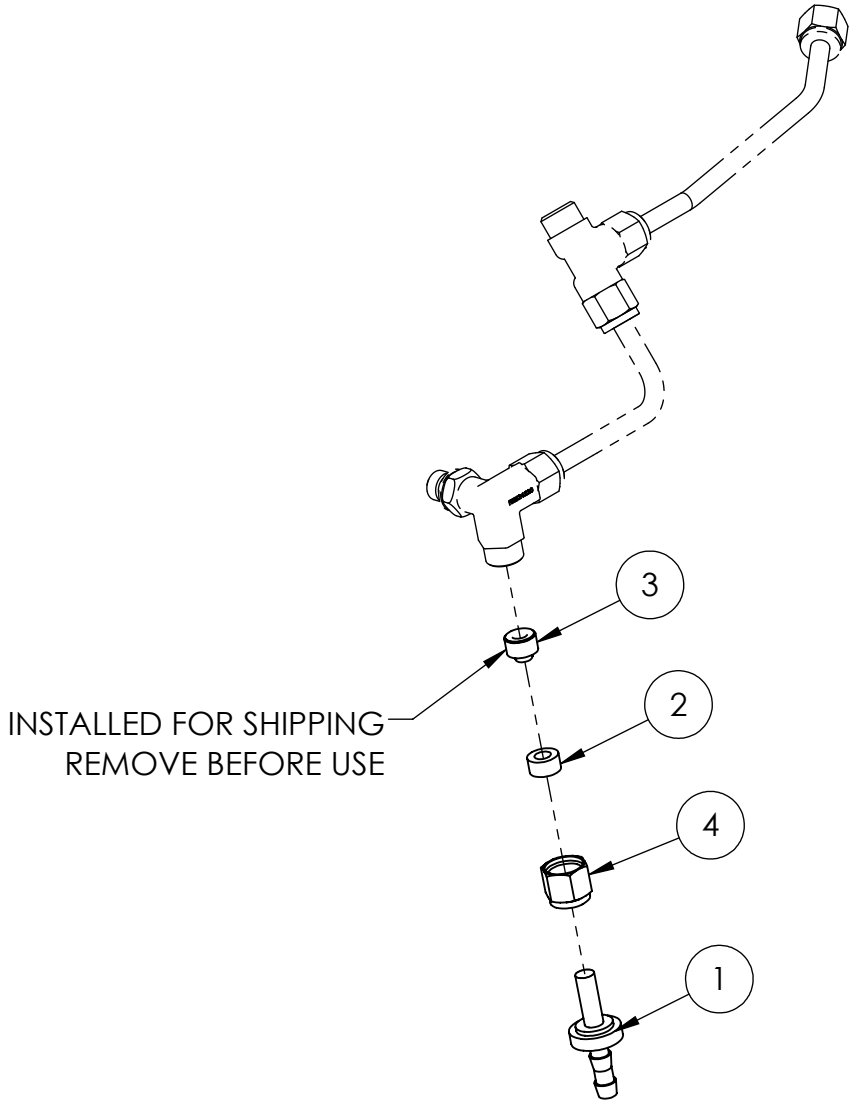

A-12975

KEY	PART NUMBER	QTY	DESCRIPTION	SERIAL NUMBER
1	21-51045	1	M. Connector, Brass 1/4" Tube Comp X 1/4 HB (Push-on)	-
2	R51936	1	Sealing Sleeve 1/4" OD Tube	-
3	AR85519	1	Plug	-
4	R123593	1	Nut	-

Notes

Engine Electrical, 12 Volt Standard Ground CAN-BUS (M50T13 - M65T13)

KEY	PART NUMBER	QTY	DESCRIPTION	SERIAL NUMBER
1	22-49411	1	Harness Assembly	-
	22-49419	1	Wire Harness Addition, Isolated Ground	-
2	22-70183	1	Dual Station Relay Panel Assembly (See Parts Detail)	-
3	22-42047	3	Relay, SPDT 50 Amp	-
4	12-00001	4	MSCR, Ph Phillips #10-32 x 3/4" S/S	-
5	14-00032	4	Hex Nut, Nylock #10-32 S/S	-
7	22-42803	1	Sender, Pressure 0-80 PSI, Isolated Ground 1/8 NPT	-
8	22-40963	1	Switch, Pressure 15 PSI N.O./N.C. 1/8NPT	-
9	22-42802	1	Sender, Temperature 250F Isolated Ground 1/2 NPT	-
10	22-40981	1	Switch, Temperature 215F N.O./N.C. Isolated Ground 3/8NPT	-
11	22-49406	1	Starter 2.5 kW StandardGround R.H. 2-Bolt SAE Type #4 Mount	-
12	12-80832	1	Capscrew, Hex Head Flanged M10 x 1.5 x 30 mm Grade 10.9	-
13	13-00814	1	Stud M10 x 1.5 x 30mm (42mm LOA) Grade 8.8	-
14	14-80811	1	Hex Nut, Flanged M10 x 1.5 Property Class 10	-
15	22-41080	1	Soleniod 85 Amp Isolated Ground	-
16	23-40009	1	Bracket	-
17	14-00101	2	Lock Nut, Serrated Flange 1/4-20	-
18	19-00060	1	Hose Clamp #60 S/S	-
19	12-00715	2	Capscrew, Hex head M8 x 1.26 x 50mm	-
20	15-00701	4	Flat Washer M8	-
21	14-04802	2	Hex Nut, Nylock M8 x 1.25 Class 8	-
22	RE509677	1	Harness Assy Filter / Separator Connection	-
23	00-78215	1	Grommet	-

* Note: Items #19-21 used to mount engine controller

Basic Engine Electrical, 12 Volt Standard Ground CAN-BUS (M65C13)

KEY	PART NUMBER	QTY	DESCRIPTION	SERIAL NUMBER
1	00-99401	1	Label "Genset Control - Run / Stop / Crank"	-
2	22-41049	1	Toggle Switch, SPST On-Off 10A 250VAC	-
3	22-41133	1	Toggle Switch (On) - Off 10A 250VAC	-
4	22-49411	1	Harness Assembly	-
5	00-78215	1	Grommet	-
7	22-49406	1	Starter 2.5 kW Standard Ground R.H. 2-Bolt SAE Type 4 Mount	-
8	22-49578	1	Alternator 75 Amp Standard Ground	-
9	12-80832	1	Capscrew, Hex Head Flanged M10 x 1.5 x 30 mm	-
10	13-05001	1	STUD M10 x 1.5 x 25 mm (37 mm LOA)	-
11	14-80811	1	Hex Nut, Flanged M10 x 1.5 mm	-
12	AT157679	1	Transient Voltage Protector	-
13	22-41080	1	Solenoid 85 Amp Isolated Ground	-
14	23-40009	1	Bracket, Solenoid Mounting	-
15	14-00101	2	Lock Nut, Serrated Flange 1/4-20	-
16	19-00060	1	Hose Clamp #60 S/S	-
17	12-00715	2	Capscrew, Hex Head M8 x 1.25 x 50 mm	-
18	15-00701	4	Flat Washer M8	-
19	14-04802	2	Hex Nut, Nylock M8 x 1.25 Class 8	-

* Note: items #17-19 used to mount engine controller

Expanded Engine Electrical System, 12 Volt Standard Ground (M65C13)

NO SEPARATE TEMPERATURE SWITCH - HIGH TEMPERATURE SHUTDOWN BY ECU

KEY	PART NUMBER	QTY	DESCRIPTION	SERIAL NUMBER
1	22-49411	1	Harness Assembly	-
	22-49419	1	Wire Harness Addition, Isolated Ground	-
2	22-70183	1	Dual Station Relay Board Sub-Assembly	-
3	22-42047	3	Relay, SPDT 50 Amp	-
4	12-00001	4	MSCR, Ph Phillips #10-32 x 3/4" S/S	-
5	14-00032	4	Hex Nut, Nylock #10-32 S/S	-
7	22-42803	1	Sender, Pressure 0-80 PSI, Isolated Ground 1/8 NPT	-
8	22-40963	1	Switch, Pressure 15 PSI N.O./N.C. 1/8NPT	-
9	22-42802	1	Sender, Temperature 250F Isolated Ground 1/2 NPT	-
11	22-49406	1	Starter 2.5 kW Standard Ground R.H. 2-Bolt SAE Type #4 Mount	-
12	12-80832	1	Capscrew, Hex Head Flanged M10 x 1.5 x 30 mm Grade 10.9	-
13	13-00814	1	Stud M10 x 1.5 x 30 mm (42 mm LOA) Grade 8.8	-
14	14-80811	1	Hex Nut, Flanged M10 x 1.5 Property Class 10	-
15	22-41080	1	Soleniod 85 Amp Isolated Ground	-
16	23-40009	1	Bracket, Solenoid Mtg.	-
17	14-00101	2	Lock Nut, Serrated Flange 1/4-20	-
18	19-00060	1	Hose Clamp #60 S/S	-
19	12-00715	2	Capscrew, Hex head M8 x 1.26 x 50mm	-
20	15-00701	4	Flat Washer M8	-
21	14-04802	2	Hex Nut, Nylock M8 x 1.25 Class 8	-
22	RE509677	1	Harness Assy Filter / Separator Connection	-
23	00-78215	1	Grommet	-

* Note: Items #19-21 used to mount engine controller

Engine Electrical, 12 Volt Isolated Ground CAN-BUS (M50T13 - M65T13)

KEY	PART NUMBER	QTY	DESCRIPTION	SERIAL NUMBER
1	22-49411	1	Harness Assembly	-
	22-49419	1	Wire Harness Addition, Isolated Ground	-
2	22-70183	1	Dual Station Relay Panel Assembly	-
3	22-42047	3	Relay, SPDT 50 Amp	-
4	12-00001	4	Machine Screw, Phillips #10-32 x 3/4" S/S	-
5	14-00032	4	Hex Nut, Nylock #10-32 S/S	-
7	22-42803	1	Sender, Pressure 0-80 PSI, Isolated Ground 1/8 NPT	-
8	22-40963	1	Switch, Pressure 15 PSI N.O./N.C. 1/8NPT	-
9	22-42802	1	Sender, Temperature 250F ISO Ground 1/2 NPT	-
10	22-40981	1	Switch, Temperature 215F N.O./N.C. Isolated Ground 3/8NPT	-
11	22-41426	1	Starter 12 Volt Isolated Ground R.H. 2-Bolt SAE Type #4 Mount.	-
12	12-80832	1	Capscrew, Hex Head Flanged M10 x 1.5 x 30 mm Grade 10.9	-
13	13-00814	1	Stud M10 x 1.5 x 30mm (42 mm LOA) Grade 8.8	-
14	14-80811	1	Hex Nut, Flanged M10 x 1.5 Property Class 10	-
15	22-41080	1	Soleniod 85 Amp Isolated Ground	-
16	23-40009	1	Bracket	-
17	14-00101	2	Lock Nut, Serrated Flange 1/4-20	-
18	19-00060	1	Hose Clamp #60 S/S	-
19	15-49502	6	Shoulder Washer	-
20	15-49503	2	Flat Washer	-
21	19M7979	2	Capscrew, Hex Head Flanged M8 x 1.25 x 55 mm Grade 10.9	-
22	15-70004	2	Snubbing Washer S/S	-
23	14-09712	2	Hex Nut, Nylock M8 x 1.25 S/S (316)	-
24	00-78215	1	Grommet	-

* Note: Items #19-23 used to mount engine controller

Basic Engine Electrical System, 12 Volt Isolated Ground (M65C13)

KEY	PART NUMBER	QTY	DESCRIPTION	SERIAL NUMBER
1	00-99401	1	Label "Genset Control - Run / Stop / Crank"	-
2	22-41049	1	Toggle Switch	-
3	22-41133	1	Toggle Switch	-
4	22-49411	1	Harness Assembly	-
5	00-78215	1	Grommet	-
7	22-41426	1	Starter 2.5 kW Isolated Ground R.H. 2-Bolt SAE Type 4 Mount	-
8	22-49587	1	Alternator 72 Amp Isolated Ground (See Parts & Mounting Detail)	-
9	12-80832	1	Capscrew, Hex Head Flanged M10x1.5 X 30 mm Grade 10.9	-
10	13-00814	1	Stud M10x1.5 X 30 mm (42 mm LOA) Grade 8.8	-
11	14-80811	1	Hex Nut,Flanged M10x1.5 Property Class 10	-
13	22-41080	1	Solenoid 85 Amp Isolated Ground	-
14	23-40009	1	Bracket	-
15	14-00101	2	Lock Nut,Serrated Flange 1/4-20	-
16	19-00060	1	Hose Clamp #60 S/S	-
17	15-49502	6	Shoulder Washer	-
18	15-49503	2	Flat Washer	-
19	19M7979	2	Capscrew,Hex Head Flanged M8x1.25 X 55 mm Grade 10.9	-
20	15-70004	2	Snubbing Washer S/S	-
21	14-09712	2	Hex Nut, Nylock M8x1.25 S/S (316)	-

* Note: Items #17-21 used to mount engine controller

Expanded Engine Electrical System, 12 Volt Isolated Ground (M65C13)

KEY	PART NUMBER	QTY	DESCRIPTION	SERIAL NUMBER
1	22-49411	1	Harness Assembly	-
	22-49419	1	Wire Harness Addition Isolated Ground	-
2	22-70083-1	1	Dual Station Relay Board Sub-Assembly,Manual Start	-
3	22-42047	3	Relay, SPDT 50 Amp	-
4	12-00001	4	Machine Screw, Phillips #10-32 X 3/4" S/S	-
5	14-00032	4	Hex Nut, Nylock #10-32 S/S	-
7	22-42803	1	Sender, Pressure 0-80 PSI, Isolated Ground 1/8NPT	-
8	22-40963	1	Switch, Pressure 15PSI N.O./N.C. 1/8NPT	-
9	22-42802	1	Sender,Temperature 250F Isolated Ground 1/2NPT	-
11	22-41426	1	Starter 2.5 kW Isolated Ground R.H. 2-Bolt SAE Type 4 Mount	-
12	12-80832	1	Capscrew,Hex Head Flanged M10x1.5 X 30 mm Grade 10.9	-
13	13-00814	1	Stud M10x1.5 X 30 mm (42 mm LOA) Grade 8.8	-
14	14-00811	1	Hex Nut M10x1.5 (17 mm Hex)	-
15	22-41080	1	Solenoid 85 Amp Isolated Ground	-
16	23-40009	1	Bracket	-
17	14-00101	2	Lock Nut,Serrated Flange 1/4-20	-
18	19-00060	1	Hose Clamp #60 S/S	-
19	15-49502	6	Shoulder Washer	-
20	15-49503	2	Flat Washer	-
21	19M7979	2	Capscrew,Hex Head Flanged M8x1.25 X 55 mm Grade 10.9	-
22	15-70004	2	Snubbing Washer S/S	-
23	14-09712	2	Hex Nut, Nylock M8x1.25 S/S (316)	-
24	00-78215	1	Grommet	-

* Note: Items #17-23 used to mount engine controller

Engine Electrical 24 Volt Standard Ground (M50T13 - M65T13)

KEY	PART NUMBER	QTY	DESCRIPTION	SERIAL NUMBER
1	22-49411	1	Harness Assembly	-
	22-49419	1	Wire Harness Addition, Isolated Ground	-
2	22-70183	1	Dual Station Relay Panel Assembly	-
3	22-40710	3	Relay, SPDT 20 Amp	-
4	12-00001	4	Machine Screw, Phillips #10-32 x 3/4" S/S	-
5	14-00032	4	Hex Nut, Nylock #10-32 S/S (18-8)	-
7	22-41016	1	Pressure Sender 0-80 PSI Standard Ground 1/8 NPT	-
8	22-40963	1	Switch, Pressure 15 PSI N.O./N.C. 1/8 NPT 10 A Contacts	-
9	22-42802	1	Sender, Temperature 250°F Isolated ground 1/2 NPT	-
10	22-40981	1	Switch, Temperature 215°F N.O./N.C. Isolated Ground 3/8 NPT	-
11	22-41445	1	Starter 4.5 kW Standard Ground R.H. 2-Bolt SAE Type #4 Mount	-
12	12-80832	1	Capscrew, Hex Head Flanged M10 x 1.5 x 30 mm Grade 10.9	-
13	13-00814	1	Stud M10 x 1.5 x 30 mm (42 mm LOA) Grade 8.8	-
14	14-80811	1	Hex Nut, Flanged M10 x 1.5 Property Class 10	-
15	22-41079	1	Solenoid 85 Amp Isolated Ground	-
16	23-40009	1	Bracket	-
17	14-00101	2	Lock Nut, Serrated Flange 1/4-20	-
18	19-00060	1	Hose Clamp	-
19	12-00715	2	Capscrew, Hex Head M8 x 1.25 x 50 mm	-
20	15-00701	4	Flat Washer M8	-
21	14-04802	2	Hex Nut, Nylock M8 x 1.25 Class 8	-
22	RE509678	1	Harness Assembly Filter / Separator Connection	-
23	00-78215	1	Grommet	-

* Note: Item # 19-21 used to mount engine controller

Engine Electrical System, 24 Volt Standard Ground (M65C13)

KEY	PART NUMBER	QTY	DESCRIPTION	SERIAL NUMBER
1	00-99401	1	Label, "Genset Control - Run / Stop / Crank"	-
2	22-41049	1	Toggle Switch	-
3	22-41133	1	Toggle Switch	-
4	22-49411	1	Harness Assembly	-
5	00-78215	1	Grommet	-
7	22-41445	1	Starter 12V 4.5kW Isolated Ground R.H. 2-Bolt SAE Type #4 Mount	-
8	22-49586	1	Alternator 50 Amp Standard Ground	-
9	12-80832	1	Capscrew, Hex Head Flanged M10 x 135 x 30 mm Grade 10.9	-
10	13-00814	1	Stud M10 x 1.5 x 30 mm (42 mm LOA) Grade 8.8	-
11	14-80811	1	Hex Nut, Flanged M10 x 1.5 Property Class 10	-
13	22-41079	1	Solenoid 85 Amp Isolated Ground	-
14	23-40009	1	Bracket	-
15	14-00101	2	Lock Nut, Serrated Flange 1/4-20	-
16	19-00060	1	Hose Clamp #60 S/S	-
17	12-00715	2	Capscrew, Hex Head M8 x 1.25 x 50 mm	-
18	15-00701	4	Flat Washer M8	-
19	14-04802	2	Hex Nut, Nylock M8 x 1.25 Class 8	-

* Note: Item # 17-19 used to mount engine controller

Expanded Engine Electrical System, 24 Volt Standard Ground (M65C13)

KEY	PART NUMBER	QTY	DESCRIPTION	SERIAL NUMBER
1	22-49411	1	Harness Assembly	-
	22-49419	1	Wire Harness Addition, Isolated Ground	-
2	22-70083-1	1	Dual Station Relay Board Sub-Assembly, Manual Start	-
3	22-40710	3	Relay, SPDT 20 Amp	-
4	12-00001	4	Machine Screw, Phillips #10-32 x 3/4" S/S	-
5	14-00032	4	Hex Nut, Nylock #10-32 S/S (18-8) S/S	-
7	22-42803	1	Sender, Pressure 0-80 PSI, Isolated Ground 1/2 NPT	-
8	22-40963	1	Switch, Pressure 15 PSI N.O./N.C. 1/8 NPT 10A	-
9	22-42802	1	Sender, Temperature 250°F Isolated Ground 1/2 NPT	-
11	22-41445	1	Starter, 4.5kW Standard Ground, R.H. 2-Bolt SAE Type #4 Mount	-
12	12-80832	1	Capscrew, Hex Head Flanged M10 x 1.5 x 30 mm Grade 10.9	-
13	13-00814	1	Stud M10 x 1.5 x 30 mm (42 mm LOA) Grade 8.8	-
14	14-80811	1	Hex Nut, Flanged M10 x 1.5 Property Class 10	-
15	22-41079	1	Solenoid 85 Amp Isolated Ground	-
16	23-40009	1	Bracket	-
17	14-00101	2	Lock Nut, Serrated Flange 1/4-20	-
18	19-00060	1	Hose Clamp #60 S/S	-
19	12-00725	2	Capscrew, Hex Head M8 x 1.25 x 50mm	-
20	12-00701	4	Flat Washer M8	-
21	14-04802	2	Hex Nut, Nylock M8 x 1.25 Class 8	-
22	RE509678	1	Harness Assembly Filter / Separator Connection	-
23	00-78215	1	Grommet	-

Engine Electrical System, 24 Volt Isolated Ground (M50T13-M65T13)

KEY	PART NUMBER	QTY	DESCRIPTION	SERIAL NUMBER
1	22-49411	1	Harness Assembly	-
	22-49419	1	Wire Harness Addition, Isolated Ground	-
2	22-70183	1	Dual Station Relay Panel Assembly	-
3	22-40710	3	Relay, SPDT 20 Amp	-
4	12-00001	4	Machine Screw, Phillips #10-32 x 3/4" S/S	-
5	14-00032	4	Hex Nut, Nylock #10-32 S/S (18-8) S/S	-
7	22-42803	1	Sender, Pressure 0-80 PSI, Isolated Ground 1/2 NPT	-
8	22-40963	1	Switch, Pressure 15 PSI N.O./N.C. 1/8 NPT 10A	-
9	22-42802	1	Sender, Temperature 250°F Isolated Ground 1/2 NPT	-
10	22-70981	1	Switch, Temperature 215°F N.O./N.C. 1/8 NPT	-
11	22-41445	1	Starter, 4.5kW Standard Ground, R.H. 2-Bolt SAE Type #4 Mount	-
12	12-80832	1	Capscrew, Hex Head Flanged M10 x 1.5 x 30 mm Grade 10.9	-
13	13-00814	1	Stud M10 x 1.5 x 30 mm (42 mm LOA) Grade 8.8	-
14	14-80811	1	Hex Nut, Flanged M10 x 1.5 Property Class 10	-
15	22-41079	1	Solenoid 85 Amp Isolated Ground	-
16	23-40009	1	Bracket	-
17	14-00101	2	Lock Nut, Serrated Flange 1/4-20	-
18	19-00060	1	Hose Clamp #60 S/S	-
19	15-49502	6	Shoulder Washer	-
20	15-49503	2	Flat Washer	-
21	14-04802	2	Hex Nut, Nylock M8 x 1.25 Class 8	-
22	19M7979	2	Capscrew, Hex Head Flanged M8 x 1.25 x 55 mm Grade 10.9	-
23	00-78215	1	Grommet	-

Basic Engine Electrical System Conversion, 24 Volt Isolated Ground (M65C13)

KEY	PART NUMBER	QTY	DESCRIPTION	SERIAL NUMBER
1	00-99401	1	Label, "Genset Control - Run / Stop / Crank"	-
2	22-41049	1	Toggle Switch	-
3	22-41133	1	Toggle Switch	-
4	22-49411	1	Harness Assembly	-
5	00-78215	1	Grommet	-
7	22-41445	1	Starter 4.5kW Isolated Ground R.H. 2-Bolt SAE Type #4 Mount	-
8	22-49584	1	Alternator 50 Amp Isolated Ground	-
9	12-80832	1	Capscrew, Hex Head Flanged M10 x 135 x 30 mm Grade 10.9	-
10	13-00814	1	Stud M10 x 1.5 x 30 mm (42 mm LOA) Grade 8.8	-
11	14-80811	1	Hex Nut, Flanged M10 x 1.5 Property Class 10	-
13	22-41079	1	Solenoid 85 Amp Isolated Ground	-
14	23-40009	1	Bracket	-
15	14-00112	2	Hex Nut, Nylock 1/4-20	-
16	19-00060	1	Hose Clamp #60 S/S	-
17	15-49502	6	Shoulder Washer	-
18	15-49503	4	Flat Washer	-
19	19M7979	2	Capscrew, Hex Head Flanged M8 x 1.25 x 55 mm Grade 10.9	-
20	15-70004	2	Snubbing Washer S/S	-
21	14-09712	2	Hex ut, Nylock M8 x 1.25 S/S (316)	-

* Note: Item # 17-21 used to mount engine controller

Expanded Engine Electrical System, 24 Volt Isolated Ground (M65C13)

KEY	PART NUMBER	QTY	DESCRIPTION	SERIAL NUMBER
1	22-49411	1	Harness Assembly	-
	22-49419	1	Wire Harness Addition, Isolated Ground	-
2	22-70083-1	1	Dual Station Relay Board Sub-Assy, Manual Start	-
3	22-40710	3	Relay, SPDT 24 VDC 20A	-
4	12-00001	4	Machine Screw, Phillips #10-32 x 3/4" S/S	-
5	14-00032	4	Hex Nut, Nylock #10-32 S/S (18-8)	-
7	22-42803	1	Pressure Sender 0-80 PSI Isolated Ground 1/8 NPT	-
8	22-40963	1	Switch, Pressure 15 PSI N.O./N.C. 1/8 NPT	-
9	22-42802	1	Sender, Temperature 250°F Isolated ground 1/2 NPT	-
11	22-41445	1	Starter 4.5 kW Isolated Ground R.H. 2-Bolt SAE Type #4 Mount	-
12	12-80832	1	Capscrew, Hex Head Flanged M10 x 1.5 x 30 mm Grade 10.9	-
13	13-00814	1	Stud M10 x 1.5 x 30 mm (45 mm LOA) Grade 8.8	-
14	14-80811	1	Hex Nut, Flanged M10 x 1.5 Property Class 10	-
15	22-41079	1	Solenoid 85 Amp Isolated Ground	-
16	23-40009	1	Bracket	-
17	14-00101	2	Lock Nut, Serrated Flange 1/4-20	-
18	19-00060	1	Hose Clamp	-
19	15-49502	6	Shoulder Washer	-
20	15-49503	4	Flat Washer	-
21	19M7979	2	Capscrew, Hex Head M8 x 1.25 x 55 mm Grade 10.9	-
22	15-70004	2	Snubbing Washer S/S	-
23	14-19712	2	Hex Nut, Nylock M8 x 1.25 S/S (316)	-
24	00-78215	1	Grommet	-

Engine Wiring Harness

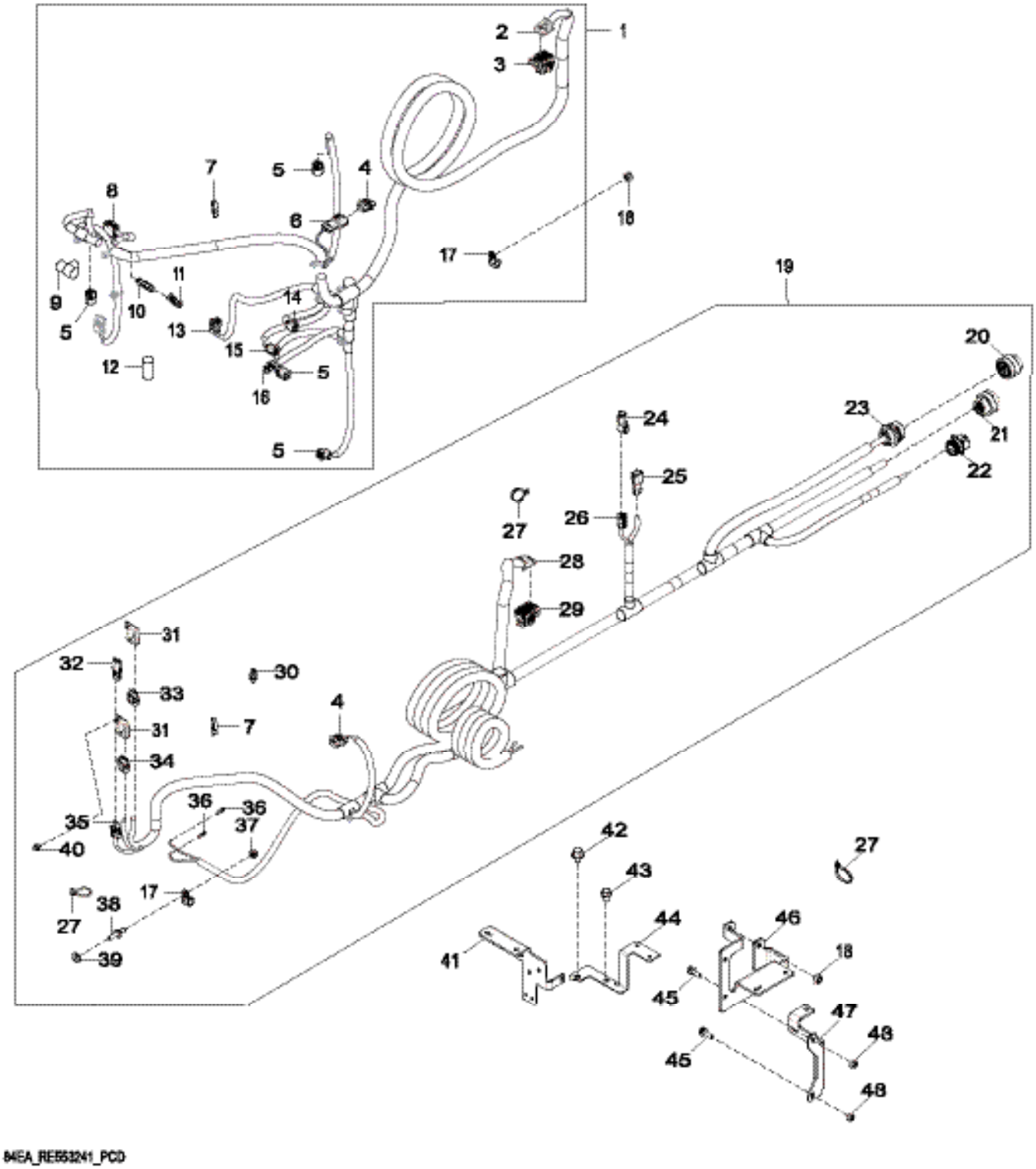

Engine Wiring Harness

KEY	PART NUMBER	QTY	DESCRIPTION	SERIAL NUMBER
1	RE553242	1	Wiring Harness 1	-
2	57M10604	1	Electrical Connector Housing	-
3	57M10605	1	Electrical Connector Housing	-
4	57M7280	2	Electrical Connector Housing	-
5	57M8601	4	Electrical Connector Housing	-
6	57M7305	1	Electrical Connector Housing	-
7	57M9246	2	Clip	-
8	57M8746	1	Electrical Connector Housing	-
9	57M9267	1	Tee Fitting	-
10	R78052	1	Electrical Connector Assembly	-
11	RE12362	1	Electrical Connector Assembly	-
12	57M9327	2	Sleeve	-
13	57M8407	1	Electrical Connector Housing	-
14	57M8403	1	Electrical Connector Housing	-
15	57M8400	1	Electrical Connector Housing	-
16	57M9005	1	Electrical Connector Housing	-
17	57M10829	2	Half Clamp	-
18	14-80811	3	Flange Nut M10	-
19	RE559576	1	Harness Kit	-
20	57M7749	1	Electrical Connector Assembly	-
21	57M8112	1	Electrical Connector Housing	-
22	57M7919	1	Electrical Connector Housing	-
23	57M7750	1	Electrical Connector Housing	-
24	57M8131	1	Electronic Terminator	-
25	57M7304	1	Electrical Connector Housing	-
26	57M8637	1	Electrical Connector Housing	-
27	R44302	8	Tie Band	-
28	57M10613	1	Electrical Connector Housing	-
29	57M10615	1	Electrical Connector Housing	-
30	RE258807	2	Tie Band	-
31	57M8487	2	Electrical Connector Cap	-
32	R78053	1	Electrical Connector Assembly	-
33	57M8600	1	Electrical Connector Housing	-
34	R104570	1	Electrical Connector Assembly	-
35	RE12363	1	Electrical Connector Assembly	-
36	57M7547	2	Electrical Connector Terminal	-
37	14M7298	1	Flange Nut M8	-
38	R529573	1	Stud	-
39	24M7476	1	Washer 8.400 X 21 X 4 mm	-
40	19M7861	2	Screw M6 X 10	-
41	R538167	1	Bracket	-
42	19M8242	1	Screw M12 X 16	-
43	19M7783	1	Screw M10 X 16	-
44	R538165	1	Bracket	-
45	19M7867	2	Screw M8 X 25	-
46	R538163	1	Bracket	-
47	R537522	1	Bracket	-
48	14M7298	2	Flange Nut M8	-

Oil Pressure Manifold

KEY	PART NUMBER	QTY	DESCRIPTION	SERIAL NUMBER
1	10-85401	1	Manifold, Oil Pressure 6 ea 1/8 NPT & 1 ea 1/4 NPT Ports	-
2	21-75703	2	Spacer, BP. 1/2 SCHD 80 x 21/32"	-
3	12-04802	2	Capscrew, Hex Head M12 x 1.75 x 40 mm	-
4	15-00912	2	Lock Washer, Helical M12 Din Code 127-B	-
5	15-00007	2	Flat Washer M12 Din Code 125A	-
6	21-52205	1	Male Connector Steel, 18/8 NPT x 1/4-37 T	-
7	18-55405	1	Hose Assembly 1/4" ID x 9"	-
8	21-71053	1	Male Elbow 90 Steel, 1/8 NPT x 1/4-37T	-
9	21-00012	4	Plug, Hex Head, Brass 1/8 NPT	-
10	21-00132	1	Bushing, Brass 1/4 NPT x 1/8 NPT	-

Pre-Alarm Switches, High Coolant Temperature / Low Oil Pressure (M65T13)

KEY	PART NUMBER	QTY	DESCRIPTION	SERIAL NUMBER
1	22-40357	1	Switch, Pressure 25 PSI N.O./N.C. 1/8 NPT	-
2	22-40943	1	Switch, Temperature 205°F N.O./N.C. 3/8 NPT Iso Ground *	-
3	22-41077	1	Terminal Strip 10 Connection 20A 600VAC #12-22 AWG	-
4	12-00005	2	Machine Screw, Phillips #8-32 x 3/4" S/S	-
5	14-00003	2	Hex Nut, Nylock #8-32 S/S	-
6	22-40914	1	Switch, Oil Temperature 240°F	-
7	22-40536	1	Switch, Cooling System Pressure 9 PSI	-

* Pre-Alarm temperature rating is 195°F.
See also Engine Electrical For Revised shut-down rating.
(Was 205°F now 215°F)

Starter

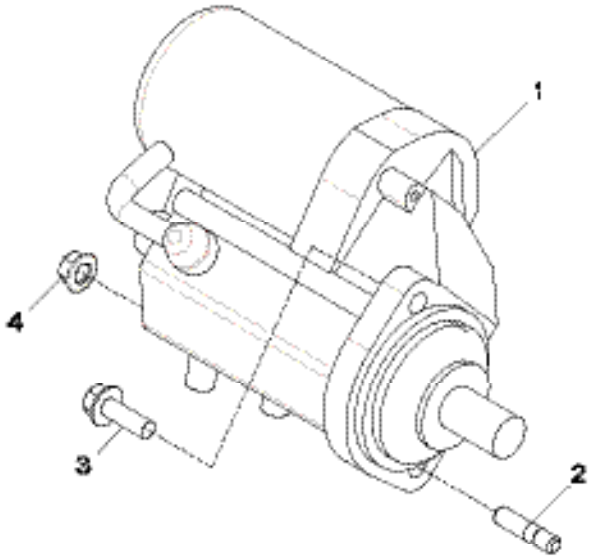

3007_RE59604_PCD

KEY	PART NUMBER	QTY	DESCRIPTION	SERIAL NUMBER
1	22-49406	1	Starter 12 Volt Standard Ground	-
	22-41426		Starter 12 Volt Isolated Ground	
	22-41445		Starter 24 Volt Isolated/Standard Ground	
2	42M7058	1	Stud	-
3	12-80832	1	Screw M10 X 30	-
4	14-80811	1	Flange Nut M10	-

Alternator 14 Volt / 75 Amps Standard Ground

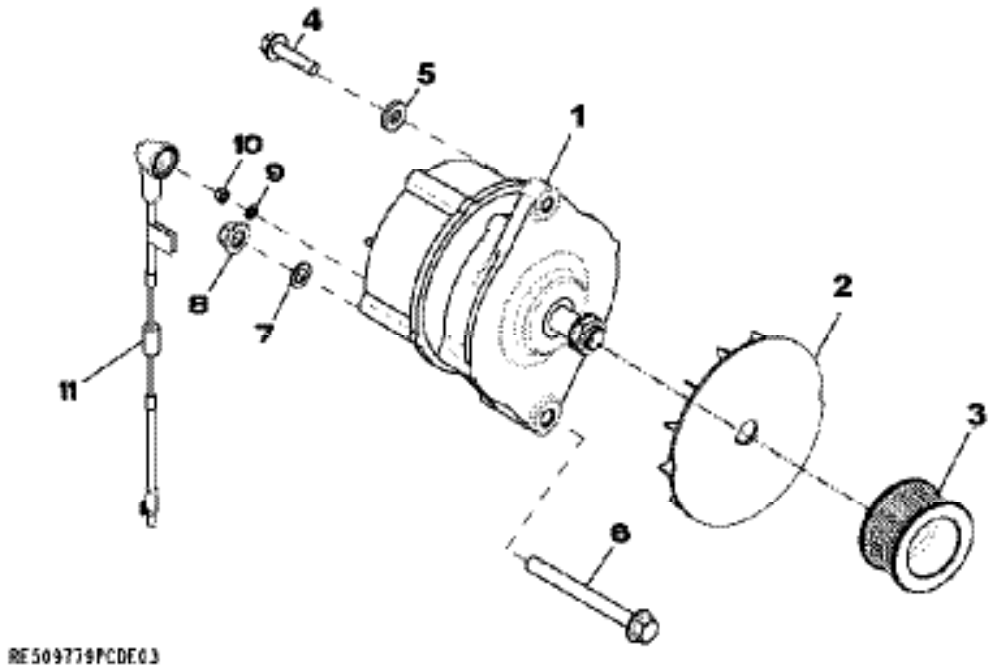

KEY	PART NUMBER	QTY	DESCRIPTION	SERIAL NUMBER
1	22-49578	1	Alternator 14 Volt 75 Amp Standard Ground (includes keys 2-3)	-
2	R505711	1	Fan	-
3	RE516489	1	Pulley	-
4	19M8291	1	Screw M8 X 35mm	-
5	R501065	1	Washer	-
6	19M7812	1	Screw M10 X 100mm	-
7	R64525	1	Thrust Washer	-
8	14-80811	1	Flange Nut M10	-
9	12M7011	1	Lock Washer 5mm	-
10	14M7297	1	Nut	-
11	RE505489	1	Wiring Harness	-
..	RE533941	1	Capacitor (Not Shown)	-
..	RE567824	1	Regulator (Not Shown)	-

Alternator 14 Volt / 75 Amps

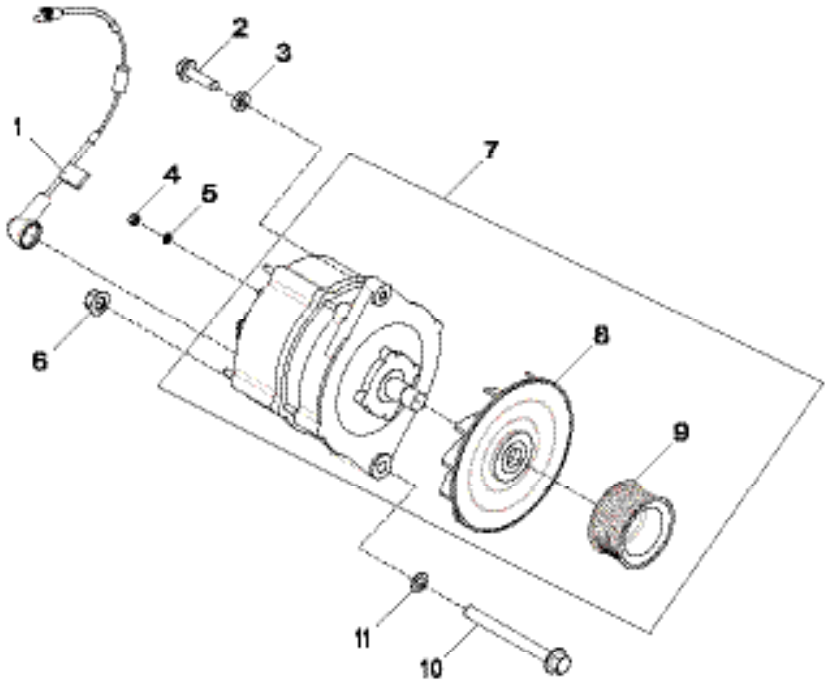

3148_RE527043_PCD

KEY	PART NUMBER	QTY	DESCRIPTION	SERIAL NUMBER
1	RE505489	1	Wiring Harness	-
2	12-80753	1	Screw M8 X 30 mm	-
3	R501065	1	Washer	-
4	14M7297	2	Nut M5	-
5	12M7064	2	Lock Washer 5 mm	-
6	12-80811	1	Flange Nut M10	-
7	22-49587	1	Alternator 14 Volt / 75 Amp Isolated Ground (includes keys #8-9)	-
8	R505711	1	Fan	-
9	RE516489	1	Pulley	-
10	19M7812	1	Screw M10 X 100 mm	-
11	R64525	1	Thrust Washer	-

Alternator 14 Volt / 95 Amps

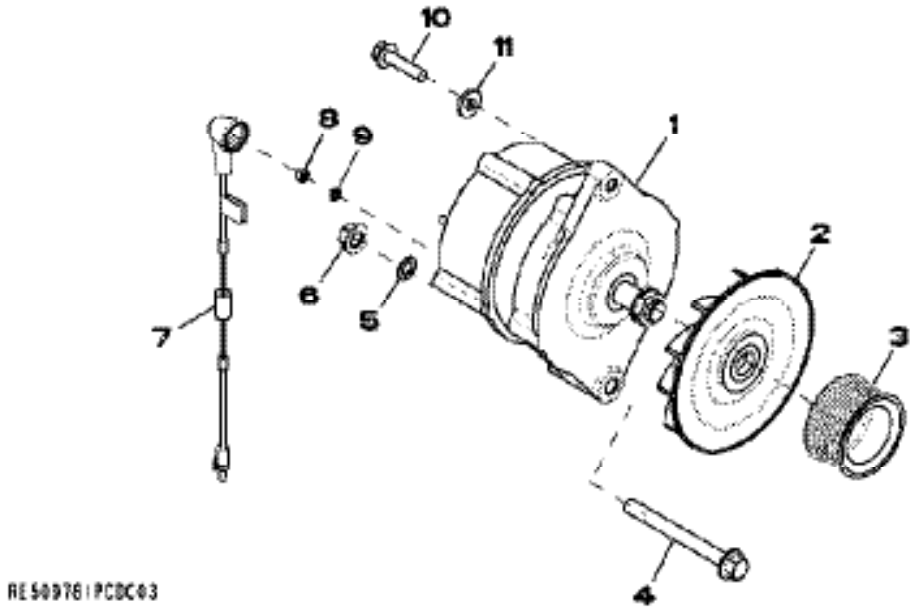

KEY	PART NUMBER	QTY	DESCRIPTION	SERIAL NUMBER
1	AH137883	1	Alternator (Bosch 95 Amp)	-
	SE501342	1	Alternator, Reman for AH137883	-
	RE533653	1	Alternator (Iskra 95 Amp) Includes R505711 and RE516489	-
2	T158584	1	Fan (for use with AH137883)	-
	R505711	1	Fan (for use with RE533653)	-
3	R501486	1	Pulley (for use with AH137883)	-
	RE516489	1	Pulley (for use with RE533653)	-
4	19M7812	1	Screw M10 X 100 mm	-
5	R64525	1	Thrust Washer	-
6	14-80811	1	Flange Nut M10	-
7	RE505489	1	Wiring Harness	-
8	14M7297	1	Nut M5	-
9	12M7064	1	Lock Washer 5mm	-
10	19M8291	1	Screw M8 X 35mm	-
11	R501065	1	Washer	-
..	H144095	1	Capacitor (for use with AH137883)	-
..	RE533941	1	Capacitor (for use with RE533653)	-
..	H144094	1	Voltage Regulator (for use with AH137883)	-
..	RE567824	1	Regulator (for use with RE533653)	-

Alternator 14 Volt / 120 Amps

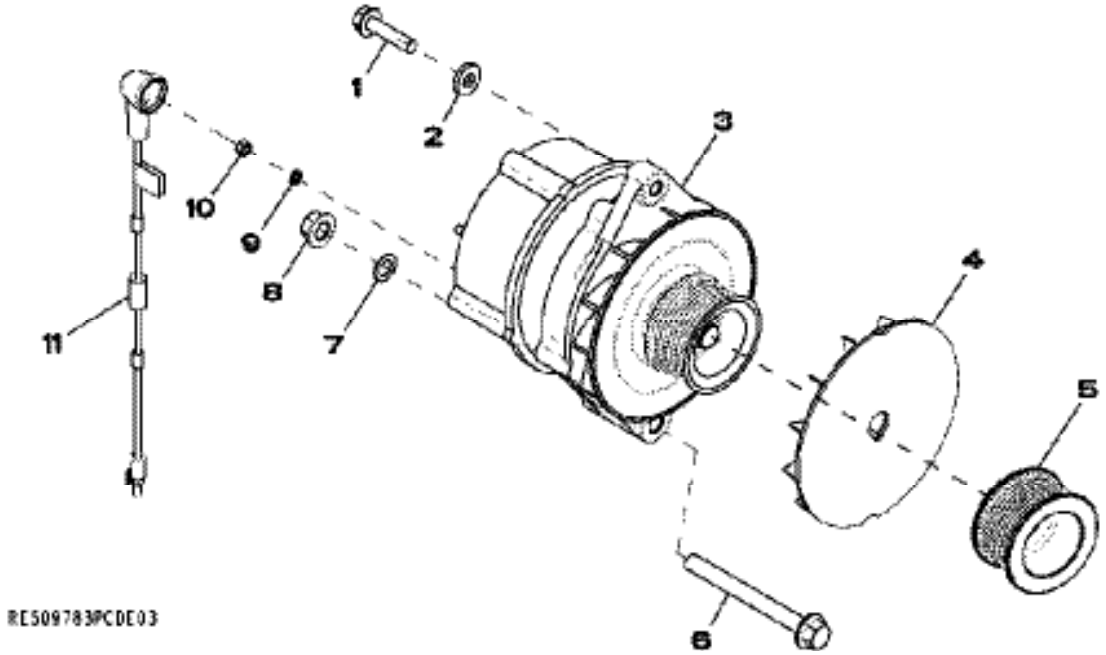

KEY	PART NUMBER	QTY	DESCRIPTION	SERIAL NUMBER
1	19M8291	1	Screw M8 X 35 mm	-
2	R501065	1	Washer	-
3	AH165975	1	Alternator 120 Amp	-
	SE501343	1	Alternator 12 Volt 120 Amp, Reman for AH165975 ,	-
	RE533654	1	Alternator 12 Volt 120 Amp, (Includes R505711, RE516489)	-
4	T158584	1	Fan (for use with AH165975)	-
	R505711	1	Fan (for use with RE533654)	-
5	R501486	1	Pulley (for use with AH165975)	-
	RE516489	1	Pulley (for use with RE533654)	-
6	19M7812	1	Screw M10 X 100 mm	-
7	R64525	1	Thrust Washer	-
8	14-80811	1	Flange Nut M10	-
9	12M7064	1	Lock Washer 5 mm	-
10	14M7297	1	Nut M5	-
11	RE505489	1	Wiring Harness	-
..	H144095	1	Capacitor (for use with AH165975)	-
..	RE533941	1	Capacitor (for use with RE533654)	-
..	H144094	1	Voltage Regulator (for use with AH165975)	-
..	RE567824	1	Regulator (for use with RE533654)	-

Alternator 28 Volt / 50 Amps

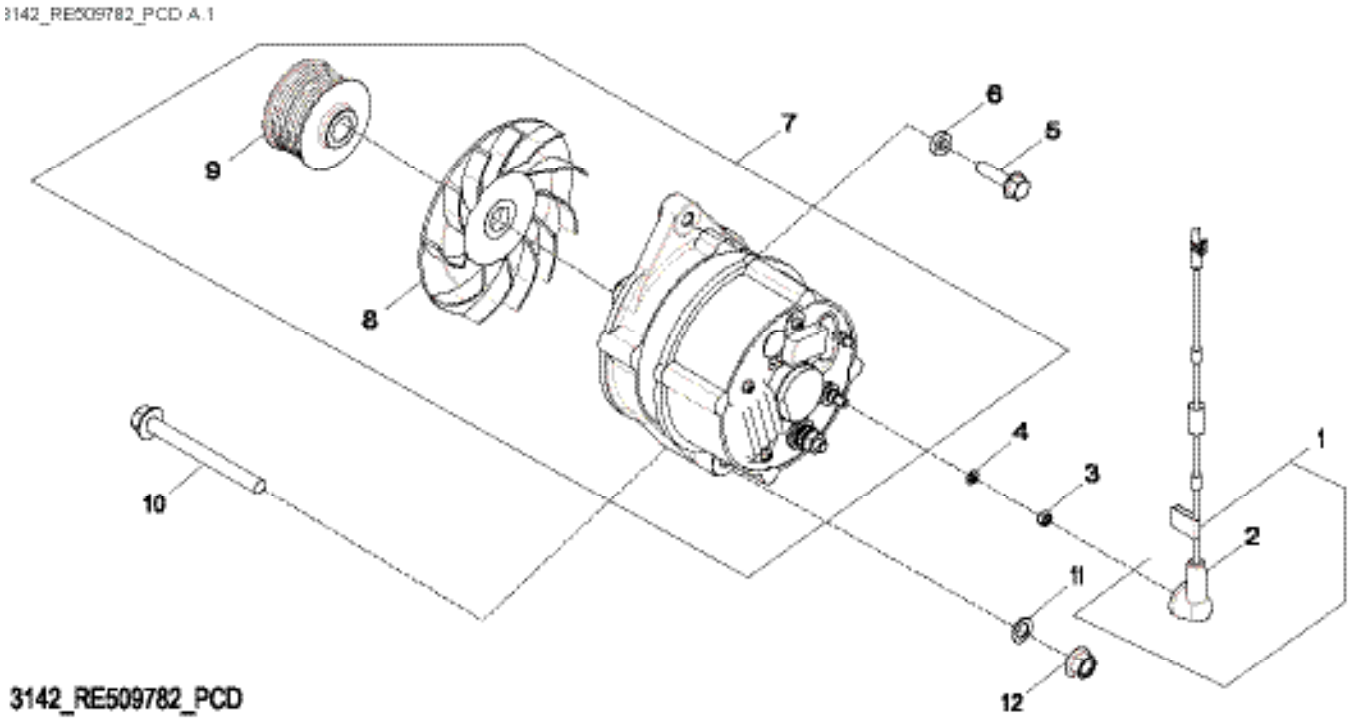

KEY	PART NUMBER	QTY	DESCRIPTION	SERIAL NUMBER
1	RE505489	1	Wiring Harness	-
2	R74993	1	Boot	-
3	14M7297	1	Nut M5	-
4	12M7011	1	Lock Washer 5 mm	-
5	12-80753	1	Screw M8 X 30 mm	-
6	R501065	1	Washer	-
7	22-4958	1	Alternator 28 Volt 50 Amp Standard Ground	-
8	R505711	1	Fan	-
9	RE516489	1	Pulley	-
10	19M7812	1	Screw M10 X 100 mm	-
11	R64525	1	Thrust Washer	-
12	14-80811	1	Flange Nut M10	-
13	RE533941	1	Capacitor (not shown)	-
14	RE567824	1	Regulator (not shown)	-

Alternator 28 Volt / 50 Amps

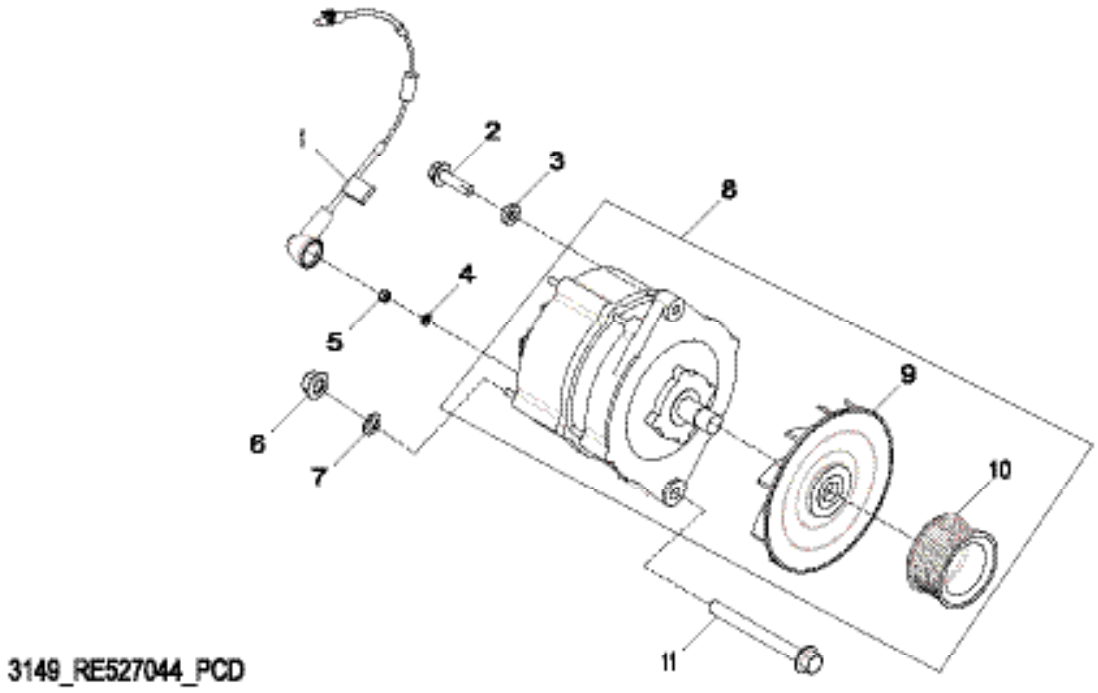

KEY	PART NUMBER	QTY	DESCRIPTION	SERIAL NUMBER
1	RE505489	1	Wiring Harness	-
2	12-80753	1	Screw M8 X 30 mm	-
3	R501065	1	Washer	-
4	12M7064	2	Lock Washer 5mm	-
5	14-80811	2	Nut M5	-
6	14M7296	1	Flange Nut M10	-
7	R64525	1	Thrust Washer	-
8	22-49584	1	Alternator 28 Volt 50 Amp Isolated	-
9	R505711	1	Fan	-
10	RE516489	1	Pulley	-
11	19M7812	1	Screw M10 X 100	-

Alternator Mounting

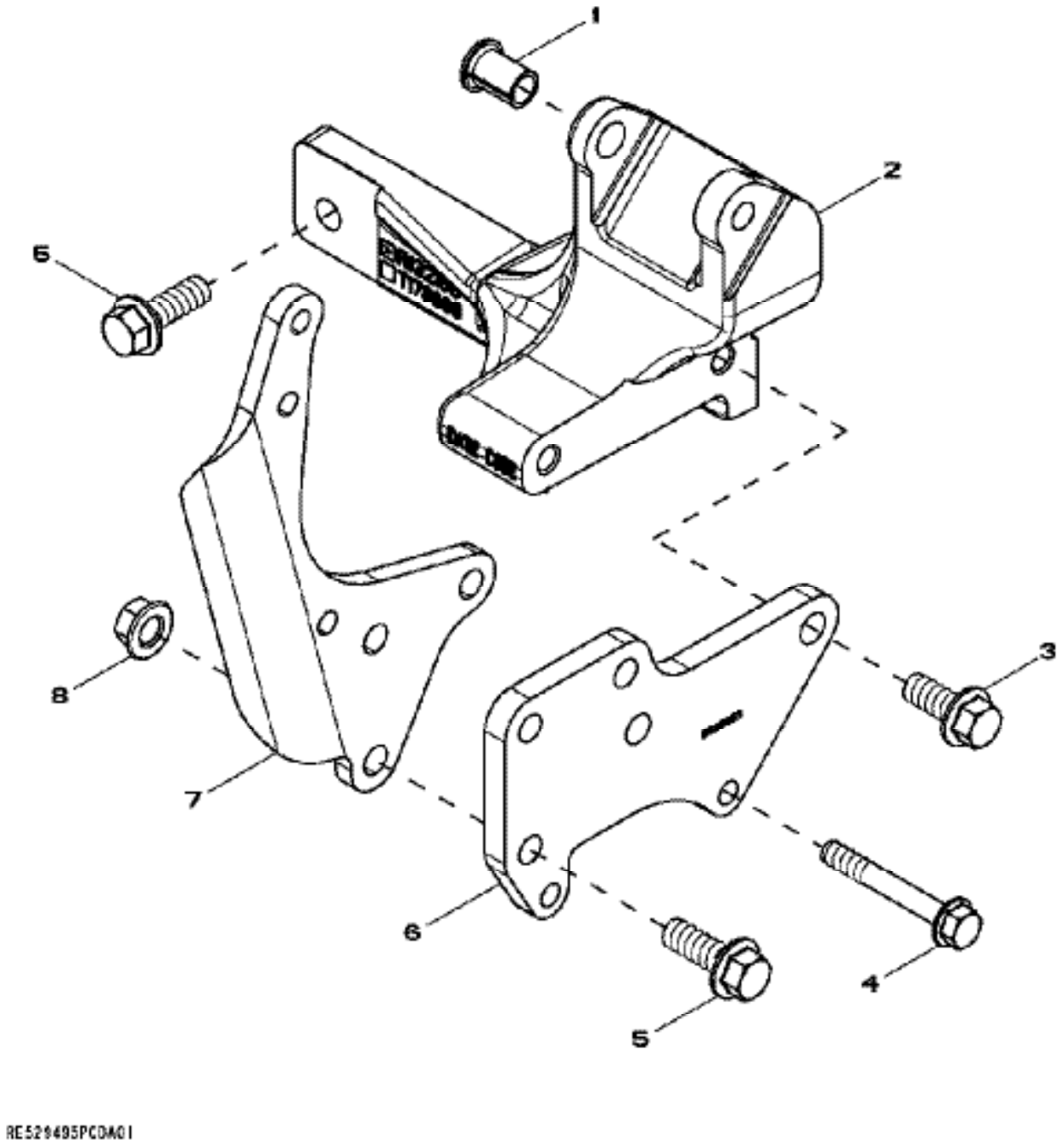

KEY	PART NUMBER	QTY	DESCRIPTION	SERIAL NUMBER
1	R100377	1	Bushing	-
2	R132166	1	Bracket	-
3	19M7785	2	Screw M10 X 25 mm	-
4	19M7801	2	Screw M8 X 60 mm	-
5	12-80832	5	Screw M10 X 30 mm	-
6	R523053	1	Support	-
7	R132167	1	Strap	-
8	14-80811	3	Flange Nut M10	-

NEMA 3R DC Electrical Enclosure & Relay Panel M65T13

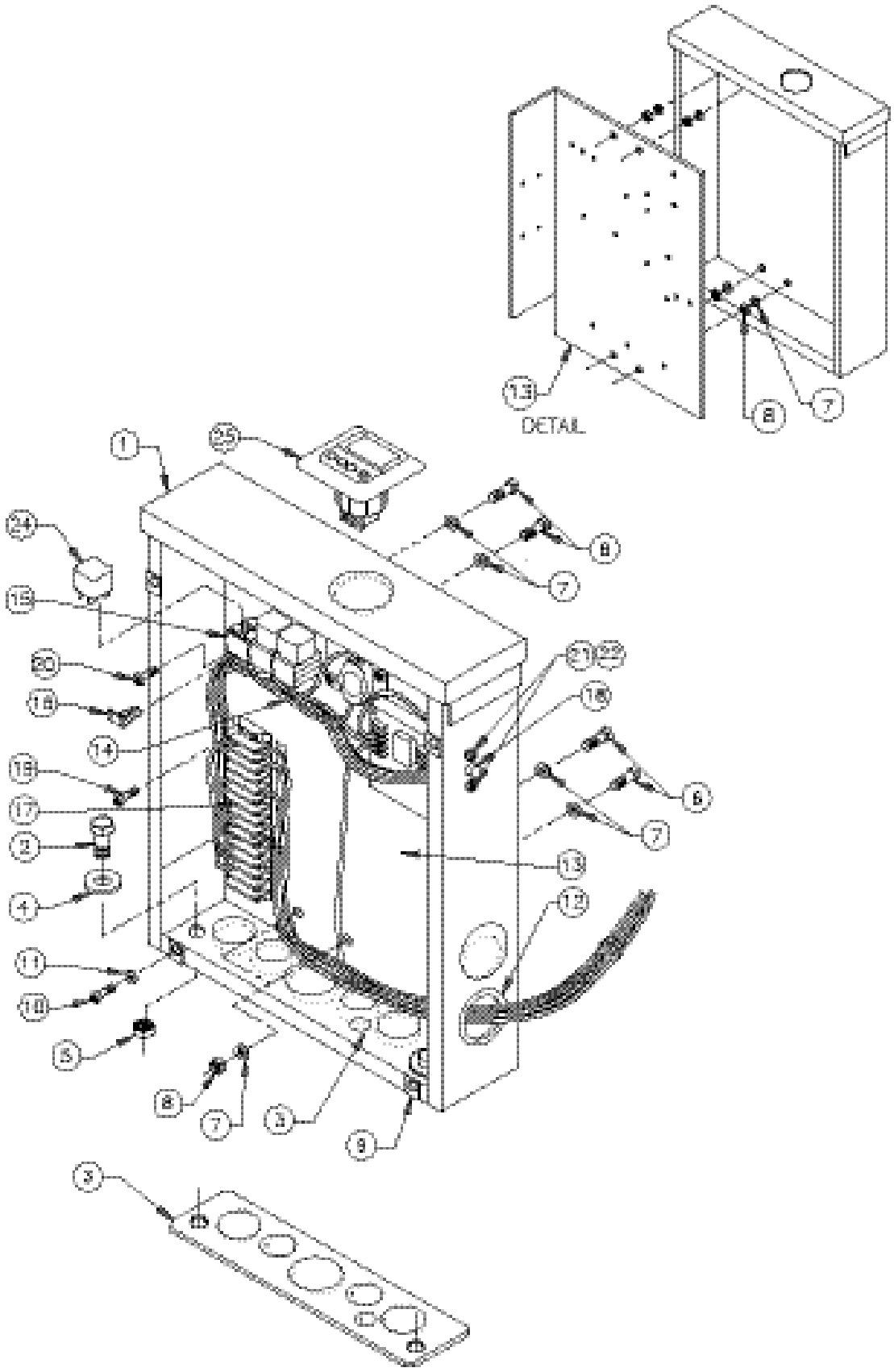

NEMA 3R DC Electrical Enclosure & Relay Panel M65T13

KEY	PART NUMBER	QTY	DESCRIPTION	SERIAL NUMBER
••	22-70183	1	Relay Panel Assembly, Manual Start (includes keys #13-23)	-
••	22-70186	1	Relay Panel Assembly, Autostart (includes keys #13-23)	-
••	22-70193	1	Relay Panel Assembly, Energise-to-stop & Redundant Power	-
			Supply (includes keys #13-23)	-
1	39-40047	1	Enclosure, NEMA 3R (former # 39-40036)	-
2	12-00832	2	Capscrew, Hex Head M10 x 1.5 x 30 mm	-
3	28-49502	1	Plate, D.C. Enclosure Mtg.	-
4	15-00014	2	Head/ Tail Washer	-
5	14-00812	2	Hex Nut, Nylock M10 x 1.5 Class 8	-
6	12-01131	4	Capscrew, Hex Head M6 x 1.0 x 20 mm	-
7	15-00008	**	Flat Washer M6	-
8	14-04803	8	Hex Nut, Nylock M6 x 1.0 Class 8	-
9	00-49503	4	Receptacle, Screw Retainer	-
10	12-72006	4	Sheet Metal Screw, Truss Head Phillips #10	-
11	15-00036	**	Flat Washer #10 Nylon	-
12	00-73109	2	Grommet 1-1/2” ID x 2-1/8” OD	-
13	28-49501	1	Back Plane	-
14	22-99537	1	Harness Assembly, Manual Start (includes key #23)	-
	22-99538	1	Harness Assembly, Autostart	-
	22-99539	1	Harness Assembly, Autostart with Redundant Power Supply	-
15	22-40391	3	Relay Base (without retainer)	-
16	22-40393	3	Terminal Retainer	-
17	22-41069	1	Terminal Strip	-
18	22-40018	1	Circuit Breaker	-
19	12-00005	4	Machine Screw, Phillips #8-32 x 3/4” S/S	-
20	12-00004	2	Machine Screw, Phillips #8-32 x 3/8” S/S	-
21	12-42105	2	Machine Screw, Phillips #8-32 x 7/8” S/S	-
22	15-00001	2	Flat Washer #8	-
23	22-41060	4	Diode 6 Amp (for use with Harness 22-99537)	-
24	22-42047	**	Relay 12 Volt	-
	22-40710	**	Relay 24 Volt	-
			**As required	
			Optional	
25	37-00086	1	Powerview Module	-
26	22-99506	1	Wire Harness (not shown)	-

12 & 24 Volt Relay Logic Board M65C13 Expanded Electrical System

Manual Start

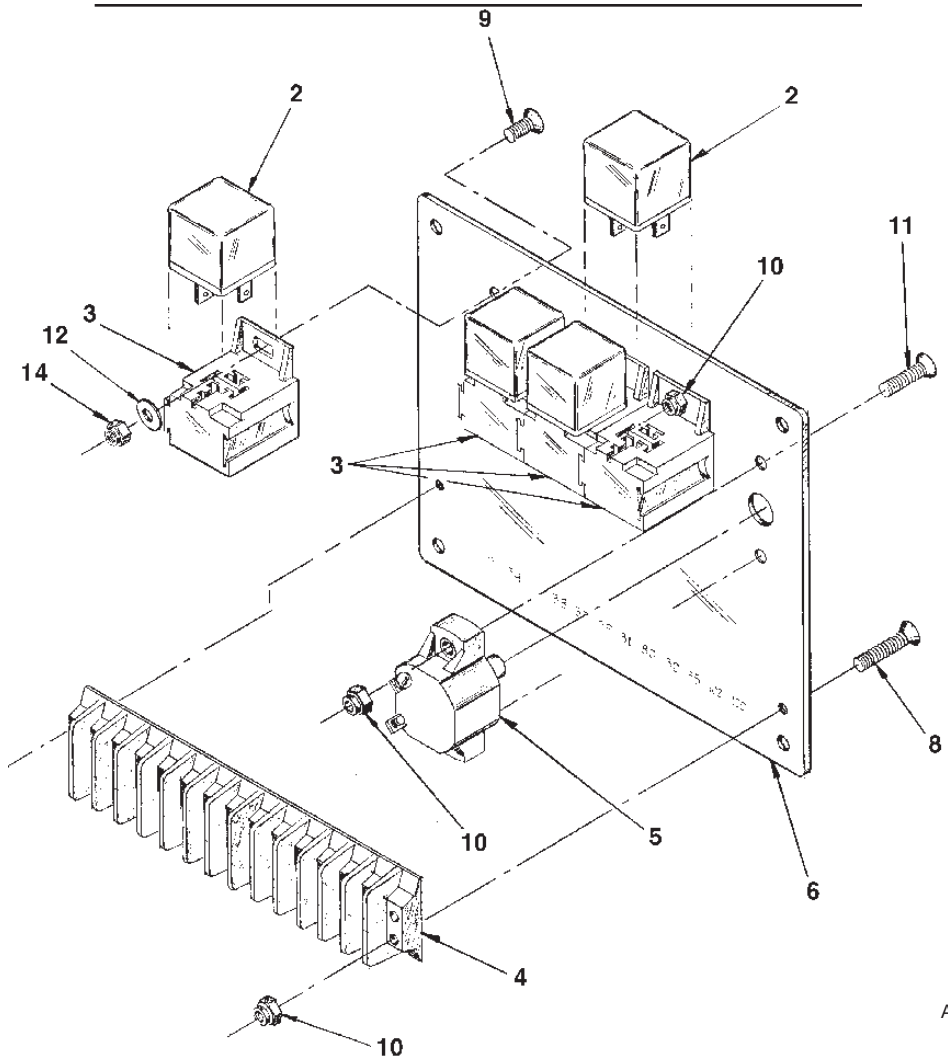

A-8851, A-8852/ C-2041

KEY	PART NUMBER	QTY	DESCRIPTION	SERIAL NUMBER
••	22-70083	1	12V Relay Logic Board, Manual Start (Includes all keys)	-
••	22-70084	1	24V Relay Logic Board, Manual Start (Includes all keys)	-
1	22-41060	2	6 amp Diode (not shown)	-
2	22-42047	4	12V Relay SPDT	-
	22-40710	4	24V Relay SPDT	-
3	22-40391	4	Relay Base	-
4	22-40193	1	12 Connection Terminal Board, 600 VAC	-
5	22-40018	1	10 amp Circuit Breaker	-
6	28-40001	1	Relay Board Mounting Plate	-
7	22-40393	4	Terminal Retainer Clip (not shown)	-
8	12-00083	2	Machine Screw, Flat Head Countersunk #8-32 x 3/4"	-
9	12-00082	4	Machine Screw, Flat Head Countersunk #8-32 x 3/8"	-
10	14-00003	4	Hex Nut, Nylock, #8 x 32	-
11	12-40225	2	Machine Screw, Flat Head Countersunk, #8-32 x 7/8"	-
12	15-00001	4	Flat Washer, #8	-
13	22-40347	1	Wire Harness, Manual Start (not shown)	-
14	14-00000	4	Hex Nut #8- 32	-

S-3C Control Panel 12 & 24 Volt Viewline Gauges

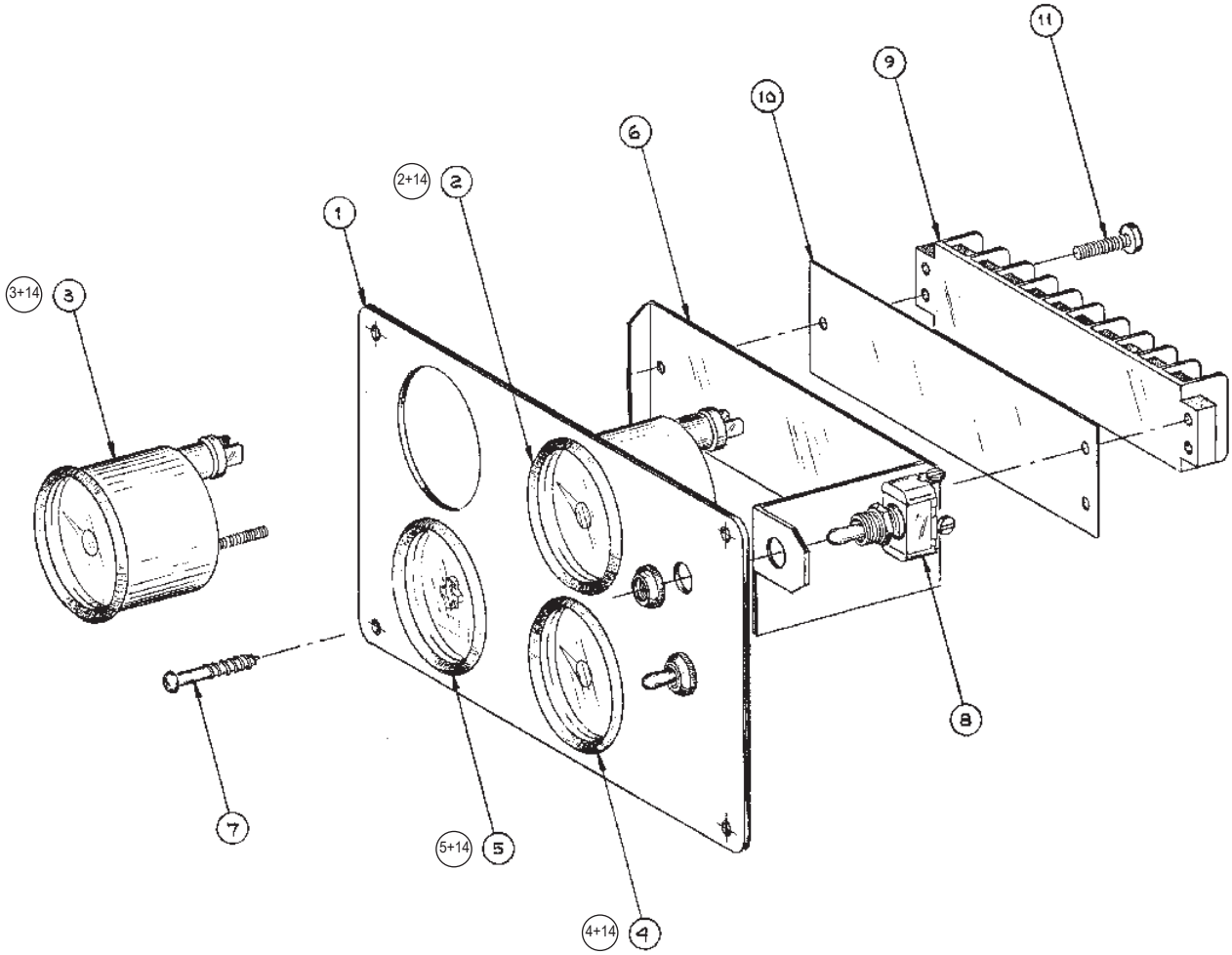

KEY	PART NUMBER	QTY	DESCRIPTION	SERIAL NUMBER
••	22-99571	1	S-3C Control Panel Assembly, 12 Volt (includes all keys)	-
••	22-99572	1	S-3C Control Panel Assembly, 24 Volt (includes all keys)	-
1	28-90010	1	Plate	-
2	37-91075-1	1	Oil Pressure Gauge, 0-80 PSI 12/24 Volt	-
3	37-91074-1	1	Engine Temperature Gauge, 250° 12/24 Volt	-
4	37-91070-1	1	Volt Meter, 8- 16 VDC	-
	37-91071-1	1	Volt Meter, 18- 32 VDC	-
5	37-91072-1	1	Hour Meter 12/ 24 Volt	-
6	23-90014	1	Bracket	-
7	12-90007	4	Self Tapping Screw, OVH Phillips #6	-
8	22-41051	2	Switch	-
9	22-41077	1	Terminal Board	-
10	22-00052	1	Number Strip	-
11	12-00006	2	Machine Screw, #8- 32 x 1/2 "	-
12	00-00013	**	Label, 12 Volt	-
	00-00014	**	Label, 24 Volt	-
13	22-40647	1	Wire Harness*	-
14	37-00014	4	Bezel	

*Not shown
**As required

S-3B Control Panel 12 & 24 Volt Viewline Gauges

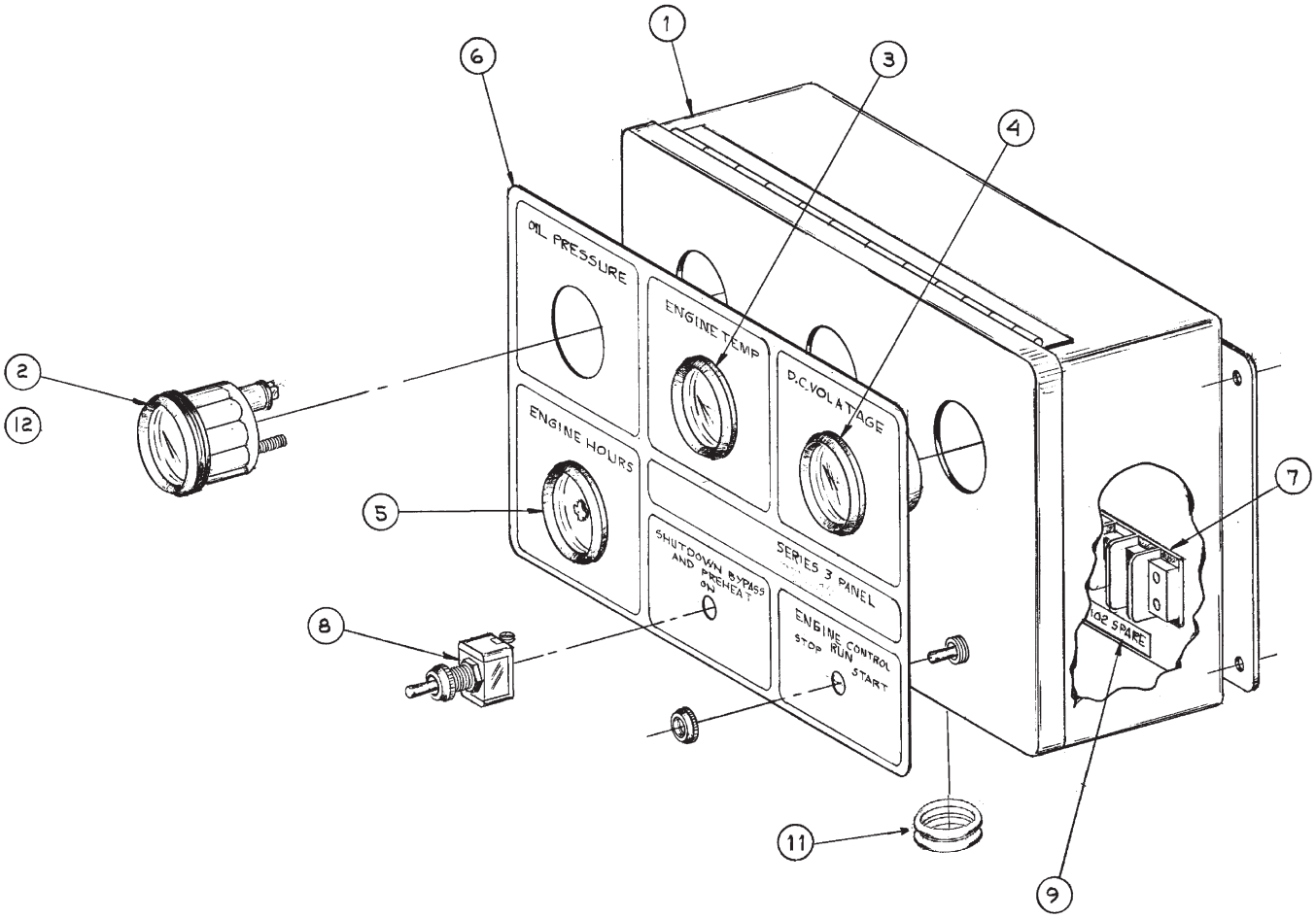

A-10525, A-10526/ C-2470

KEY	PART NUMBER	QTY	DESCRIPTION	SERIAL NUMBER
••	22-99567	1	S-3B Control Panel Assembly, 12 Volt (includes all keys)	-
••	22-99568	1	S-3B Control Panel Assembly, 24 Volt (includes all keys)	-
1	39-40008	1	Enclosure	-
2	37-90081-1	1	Oil Pressure Gauge 12 / 24 Volt	-
3	37-90075-1	1	Temperature Gauge 12 / 24 Volt	-
4	37-90072-1	1	DC Volt Meter, 8- 16 VDC	-
	37-90073-1	1	DC Volt Meter, 18- 32 VDC	-
5	37-90074-1	1	Hour Meter	-
6	00-91018	1	Decal	-
7	22-41077	1	Terminal Board	-
8	22-41051	2	Switch	-
9	22-00052	1	Number Strip	-
10	22-40257	1	Wire Harness	-
11	00-40028	1	Grommet	-
12	27-00015	4	Bezel	-

Transient Voltage Protector, 12 & 24 Volt

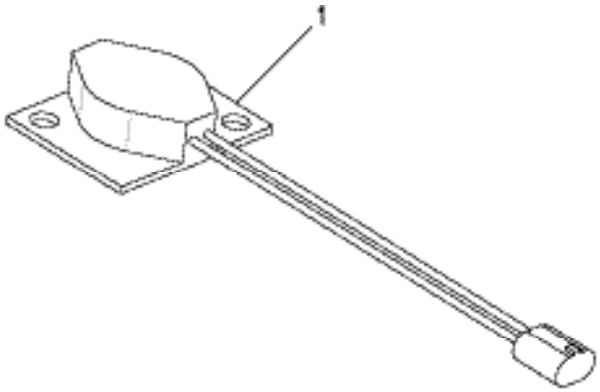

KEY	PART NUMBER	QTY	DESCRIPTION	SERIAL NUMBER
1	AT157679	1	DIode 12 Volt	-
1	AT163022	1	Diode 24 Volt	-

Belt Tensioner

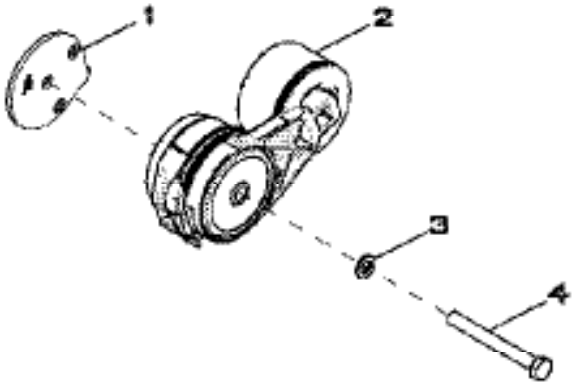

RE597011PCD002

KEY	PART NUMBER	QTY	DESCRIPTION	SERIAL NUMBER
1	R518210	1	Spacer	-
2	RE518097	1	Belt Tensioner	-
3	24M7106	1	Washer	-
4	19M8183	1	Cap Screw M10 X 90 mm	-

Guard Assembly and Drive Belt (without PTO)

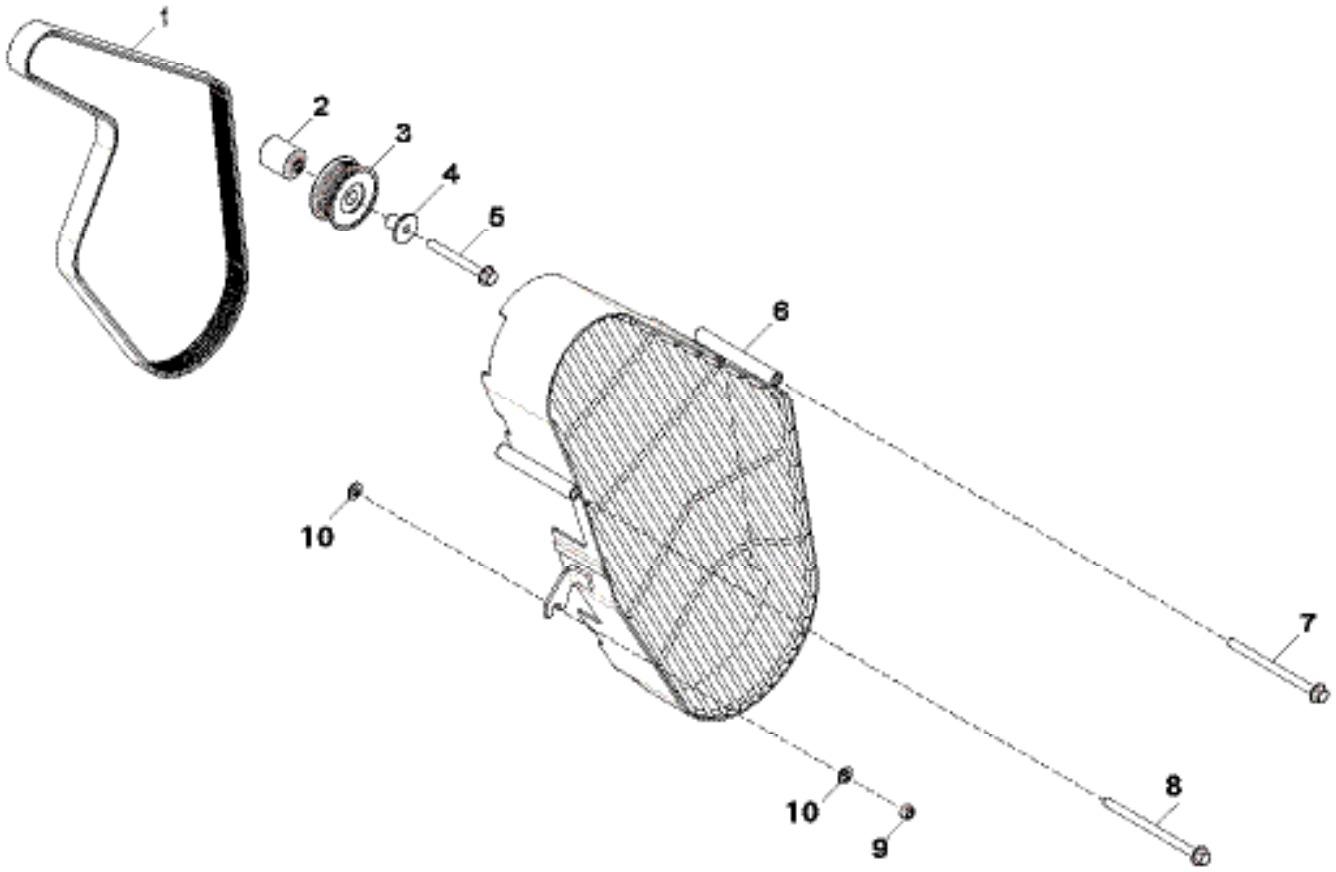

KEY	PART NUMBER	QTY	DESCRIPTION	SERIAL NUMBER
1	R500277	1	V-Belt	-
2	R529378	1	Spacer	-
3	AT211041	1	Pulley	-
4	R529790	1	Sleeve	-
5	19M7811	1	Screw M10 X 90 mm	-
6	RE567058	1	Guard	-
7	19M8896	1	Screw M10 X 140 mm	-
8	19M7958	1	Screw M10 X 150 mm	-
9	14M7298	1	Flange Nut M8 x 1.25	-
10	15-00805	2	Flat Washer M10	-

Belt Guard, Medium Frame Alternators with PTO

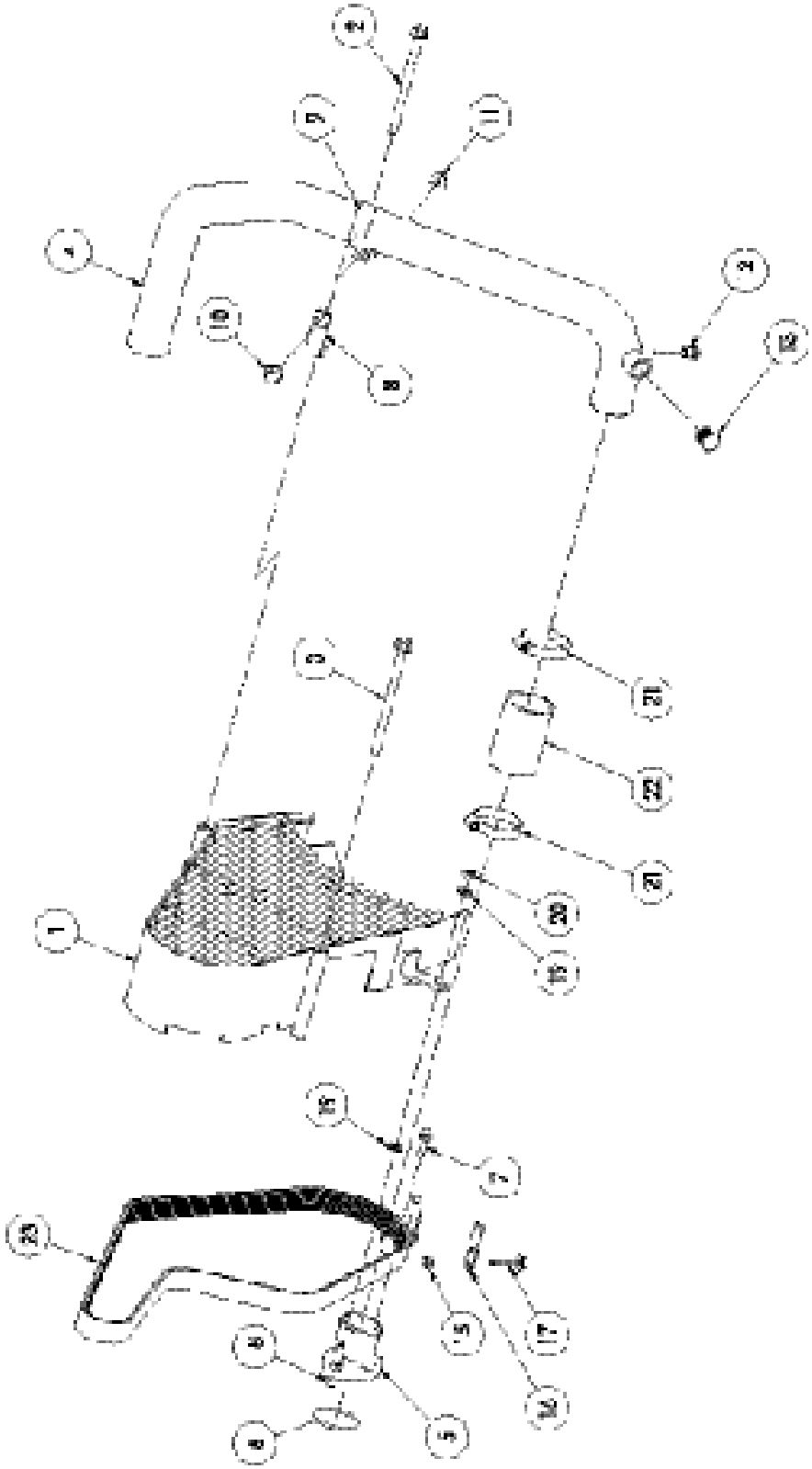

Belt Guard, Medium Frame Alternators with PTO

KEY	PART NUMBER	QTY	DESCRIPTION	SERIAL NUMBER
1	00-09407	1	Belt Guard	-
2	19M8896	1	Capscrew, Hex Head Flanged M10 x 1.5 x 140 mm Grade 10.9	-
3	19M7958	1	Capscrew, Hex Head Flanged M10 x 1.5 x 150 mm Grade 10.9	-
4	27-19521	1	Tube, Coolant Pump Inlet	-
5	R121634	1	Adapter, Coolant Pump Inlet 2" HB	-
6	R89944	1	O-ring	-
7	19M7867	1	Capscrew, Hex Head Flanged M8 x 1.25 x 25 mm Grade 10.9	-
8	23-19512	1	Bracket, Tube Support	-
9	16-60000	1	Adelle Clamp 2-1/16" ID x 1/2" Stud	-
10	19M7784	1	Capscrew, Hex Head Flanged M10 x 1.5 x 20 mm Grade 10.9	-
11	14-80811	1	Hex Nut, Flanged M10 x 1.5 Property Class 10	-
12	21-31624	1	Plug, Hex Head, Brass 1/4 NPT	-
13	21-00530	1	Plug, Hex Head, Brass 1/2 NPT	-
14	19-71030	1	Adelle Clamp 1-1/8"ID x 1/2" Stud	-
15	21-05002	2	Spacer	-
16	23-09511	2	Bracket, Extra Drive Belt Support	-
17	12-80753	1	Capscrew, Hex Head Flanged M8 x 1.25 x 30 mm Grade 10.9	-
18	R501462	1	Stud M8 x 1.25 x 58mm Special	-
19	15-00211	2	Flat Washer 5/16" USS	-
20	14M7298	1	Hex Nut, Flanged M8 x 1.25 Property Class 8	-
21	19-00036	2	Hose Clamp #36 S/S	-
22	R519500	1	Hose 2" ID x 3-1/2"	-
23	R500277	1	Drive Belt, Poly-V 28 mm x 1500 mm *	-
	40-09504	1	Drive Belt, Poly-V 28 mm x 1523 mm **	-

* Used with alternators: 14 Volt 75 Amp &
28 Volt 50 Amp

** Used with alternators: 14 Volt 51 Amp &
28 Volt 35 Amp

Engine Sensors

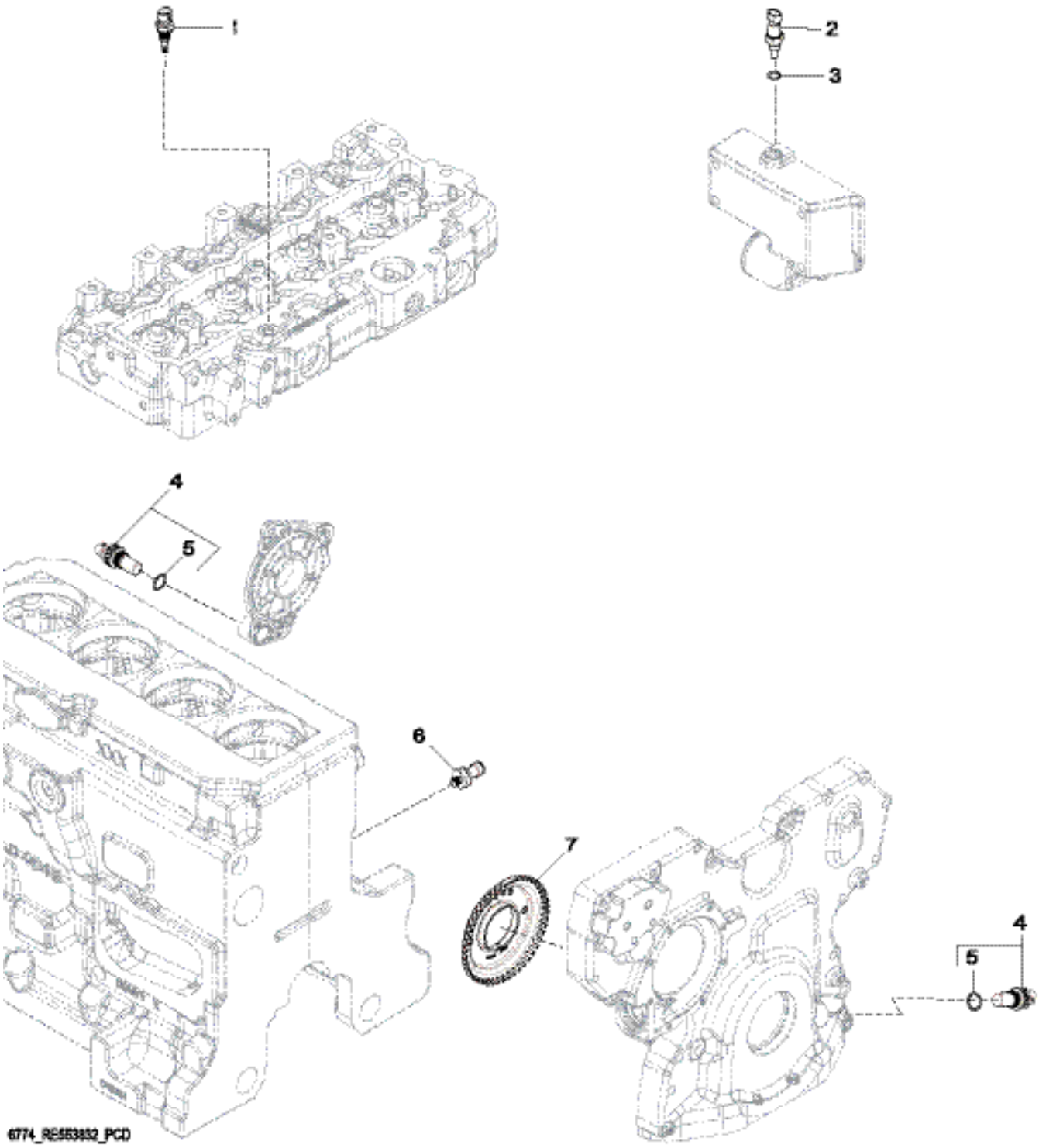

Engine Sensors

KEY	PART NUMBER	QTY	DESCRIPTION	SERIAL NUMBER
1	RE525016	1	Thermocouple (Air Temperature Sensor)	-
2	RE52722	1	Temperature Sensor (Coolant Temperature Sensor)	-
3	16-00005	1	O-Ring 11.3 X 2.2 mm	-
4	RE519144	2	Sensor (Magnetic Pick Up Sensor)	-
5	51M7044	1	O-Ring 17.3 X 2.2 mm	-
6	RE167207	1	Sensor (Crankcase Pressure Sensor)	-
7	R517471	1	Wheel (Crankshaft Timing Wheel)	-

Immersion Block Heater 110 VAC

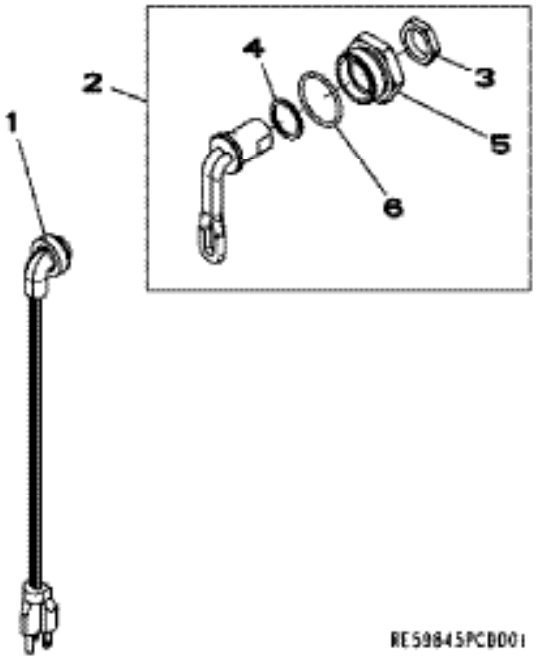

KEY	PART NUMBER	QTY	DESCRIPTION	SERIAL NUMBER
1	20-49503	1	Thermostat & Cable Assembly	-
2	20-49501	1	Heater Element 750 Watt	-
3	RE42139	1	Heater Element 1000 Watt	-
4	R206883	1	Washer 25.800 X 31.750 X 1.600 mm (1-1/64" X 1-1/4" X 1/16")	-
5	R54123	1	Adapter Fitting 1-5/8"-12 UN	-
6	16-72020	1	O-Ring 37.465 X 2.997 mm (1.475" X 0.118")	-

Immersion Block Heater 270 VAC

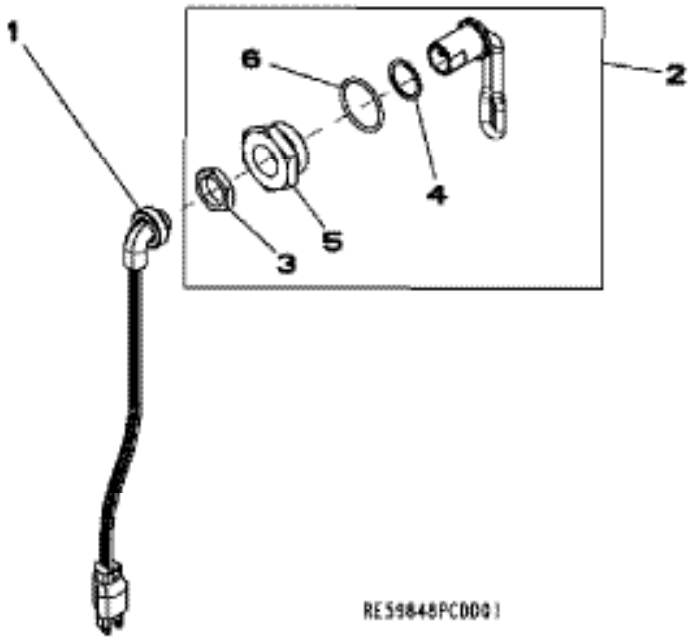

KEY	PART NUMBER	QTY	DESCRIPTION	SERIAL NUMBER
1	20-49504	1	Thermostat & Cable Assembly	-
2	RE505888	1	Heater Element 1000 Watt	-
4	R206883	1	Washer 25.800 X 31.750 X 1.600 mm (1-1/64" X 1-1/4" X 1/16")	-
5	R54123	1	Adapter Fitting 1-5/8"-12 UN	-
6	16-72020	1	O-Ring 37.465 X 2.997 mm (1.475" X 0.118")	-

Engine Installation Kit - Starter Relay

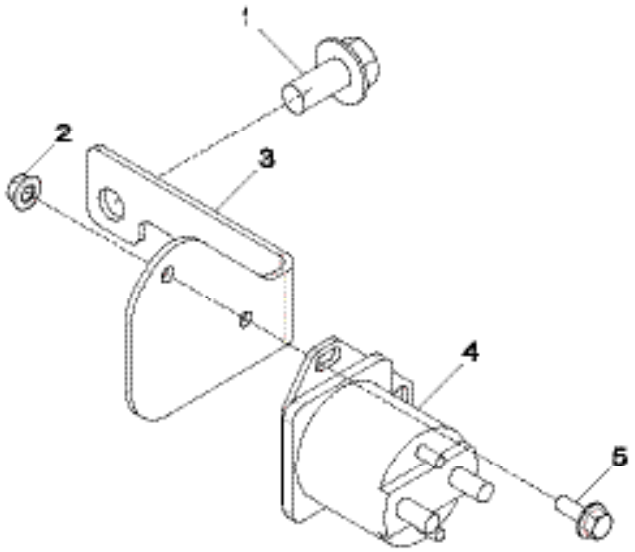

917W_RE541570_PCD

KEY	PART NUMBER	QTY	DESCRIPTION	SERIAL NUMBER
1	19M7788	2	Screw M12 X 25 mm	-
2	14M7303	2	Flange Nut M6	-
3	R532134	1	Bracket	-
4	AL153172	1	Relay 12V	-
5	19M7775	2	Screw M6 X 16 mm	-

Engine Installation Kit - Starter Relay

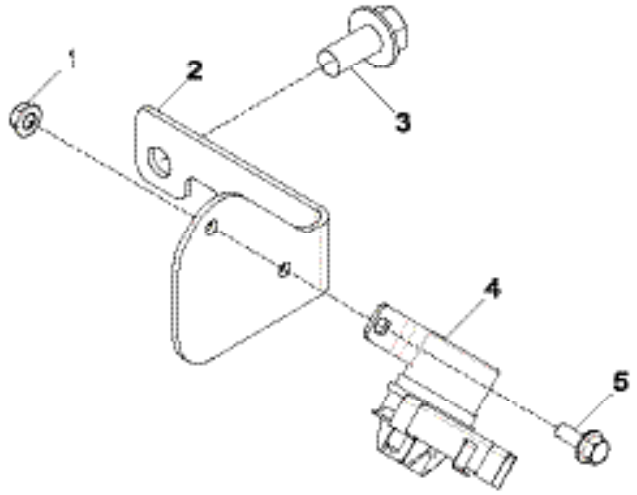

917Y_RE541753_PCD

KEY	PART NUMBER	QTY	DESCRIPTION	SERIAL NUMBER
1	14M7303	2	Flange Nut M6	-
2	R532134	1	Bracket	-
3	19M7788	2	Screw M12 X 25 mm	-
4	AT145341	1	Relay 24V	-
5	19M7775	2	Screw M6 X 16 mm	-

Engine Installation Kit - Starter Relay

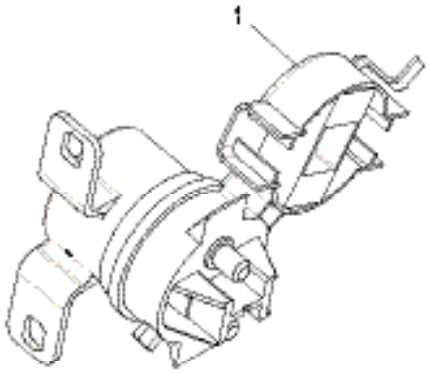

917X_RE541752_PCD

KEY	PART NUMBER	QTY	DESCRIPTION	SERIAL NUMBER
1	AT145341	1	Relay	-

Engine Installation Kit - Starter Relay

917V_RE541569_PCD

KEY	PART NUMBER	QTY	DESCRIPTION	SERIAL NUMBER
1	AL153172	1	Relay	-

Gasket Set, Engine Overhaul M65T13 - M65C13

KEY	PART NUMBER	QTY	DESCRIPTION	SERIAL NUMBER
000	11-79501	2	Gasket,Oil Filler & Block-Off Plate Mtg	-
000	16-00012	1	O-Ring 9.3 mm ID X 2.2 mm	-
000	16-09501	4	O-Ring 19.3 mm ID X 2.2 mm	-
000	16-09503	1	O-Ring 15.3 mm ID X 2.2 mm	-
000	16-19503	1	O-Ring 4-1/4" ID X 3/32"	-
000	16-72020	2	O-Ring 1.48" ID X 0.12"	-
000	16-95401	1	O-Ring 1-1/2" ID X 1/8"	-
000	51M7042	2	O-Ring 13.3 mm ID X 2.2 mm	-
000	51M7044	1	O-Ring 17.3 mm ID X 2.2 mm	-
000	F1430R	2	O-Ring	-
000	F2576R	2	O-Ring	-
000	R108612	1	Gasket,Turbocharger Mtg	-
000	R108730	1	Gasket,Thermostat Housing	-
000	R108848	1	Gasket	-
000	R116031	1	O-Ring	-
000	R116515	1	Head Gasket 4045 Powertech 2V	-
000	R123417	1	Gasket,Coolant Pump Mtg	-
000	R123501	1	Gasket	-
000	R26906	1	O-Ring	-
000	R500374	1	Gasket,Oil Filter Adapter Mtg	-
000	R501428	1	Gasket	-
000	R502902	1	Packing	-
000	R504734	1	O-Ring 1-1/2" ID X 1/8"	-
000	R516125	1	O-Ring	-
000	R516647	4	O-Ring	-
000	R521158	1	Turbo Gasket	-
000	R522630	4	Seal	-
000	R522690	1	Gasket	-
000	R523499	4	Washer,Injector Seal	-
000	R524468	1	Gasket,Rocker Cover	-
000	R545883	1	Gasket,Timing Cover 4.5 & 6.8 4V	-
000	R55453	1	O-Ring	-
000	R61467	1	O-Ring	-
000	R61871	1	O-Ring	-
000	R63548	1	O-Ring	-
000	R81275	2	Gasket	-
000	R89944	1	O-Ring	-
000	R97185	1	O-Ring 5/8" ID X 1/8" Nitrile	-
000	RE44574	1	Seal,Rear Crankshaft With Wear Sleeve 4 & 6 Cyl Powertech	-
000	RE538097	1	Seal,Front Crankshaft 4 & 6 Cyl Powertech	-
000	RE552056	1	Gasket, Exhaus Manifold	-
000	T122075	1	O-Ring 1-3/8" X 3/32" Nitrile	-
000	T77613	1	O-Ring	-

Notes

Steel Base Pan with Hyd Mtg - M65T13 /M360

362 PSL & 363 PSL GENERATORS

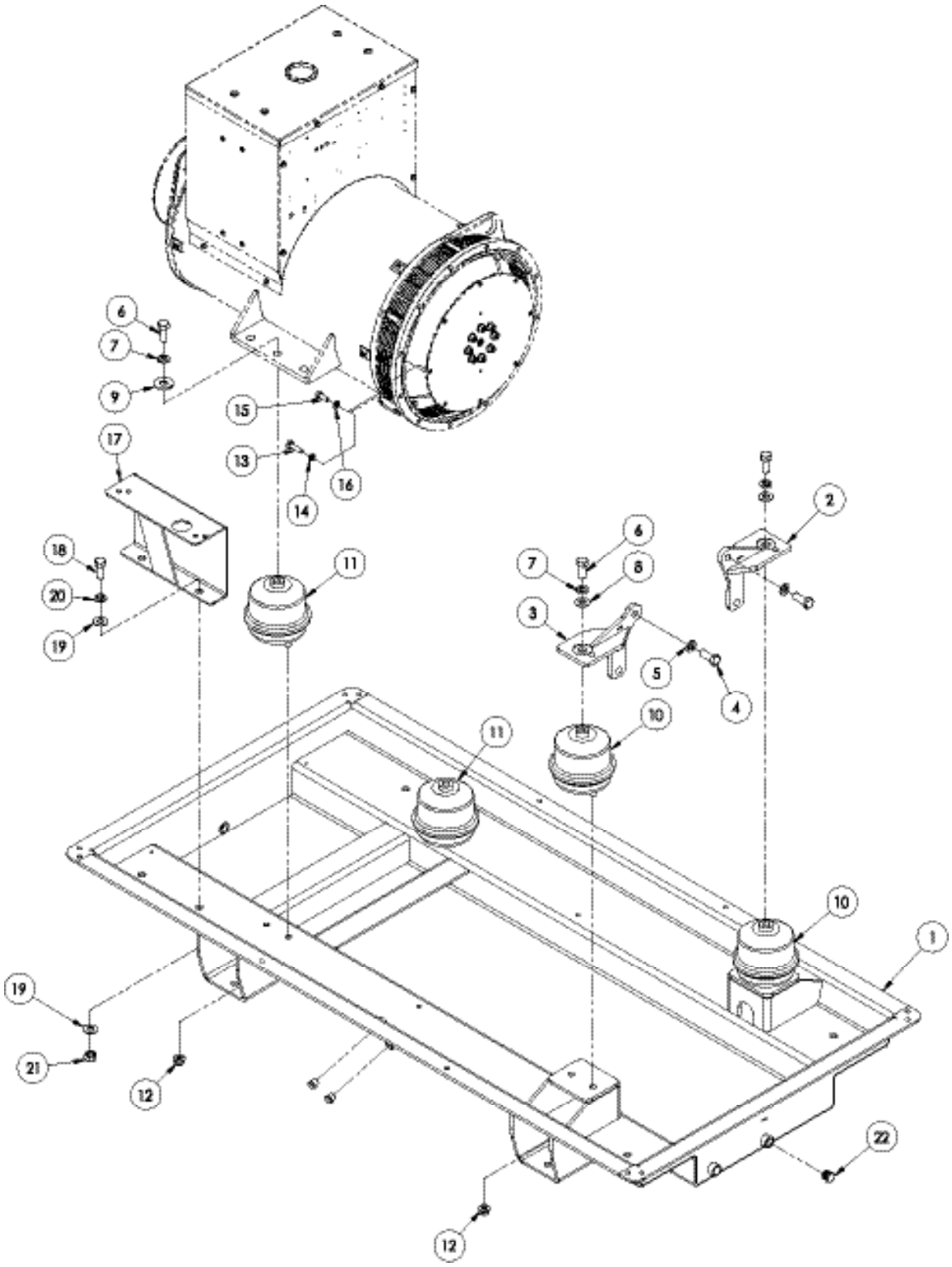

Steel Base Pan with Hyd Mtg - M65T13 /M360

362 PSL & 363 PSL GENERATORS

KEY	PART NUMBER	QTY	DESCRIPTION	SERIAL NUMBER
1	39-89433	1	Base Frame, Steel Hyd Mtg	-
2	23-81002	1	Bracket, Front Engine Mtg, L.H.	-
3	23-81001	1	Bracket, Front Engine Mtg, R.H.	-
4	12-04803	4	Capscrew, Hex Head M16 x 2.0 x 40mm	-
5	15-01000	4	Lock Washer, Helitical M16	-
6	12-00913	4	Capscrew, Hex Head 5/8-11 x 1-1/2"	-
7	15-00902	4	Lock Washer, Helical 5/8"	-
8	15-00901	2	Flat Washer 5/8" USS	-
9	15-01330	2	Flat Washer 5/8" SAE	-
10	33-81012	2	Hydrolastic Mount 400 lbs (with 362 frame generator)	-
	33-81013	2	Hydrolastic Mount 500 lbs (with 363 frame generator)	-
11	33-81013	2	Hydrolastic Mount 500 lbs (with 362 frame generator)	-
	33-81015	2	Hydrolastic Mount 700 lbs (with 363 frame generator)	-
12	14-00502	8	Lock Nut, Plain, Flanged 1/2-13 Grade F Plated	-
13	12-00814	12	Capscrew, Hex Head M10 x 1.5 x 35mm	-
14	15-00802	12	Lock Washer Helitical M10 Din Code 127-B	-
15	12-00332	8	Capscrew, Hex Head 3/8-16 x 1" Grade 8 Plated	-
16	15-00307	8	Flat Washer 3/8" / M10 Hardened	-
17	23-79608	1	Bracket, DC J-Box Mounting	-
18	12-00913	2	Capscrew, Hex Head 5/8-11 x 1-1/2"	-
19	15-01330	4	Flat Washer, 5/8" SAE	-
20	15-00902	2	Lock Washer, Helical 5/8"	-
21	14-00911	2	Hex Nut 5/8-11	-
22	21-00530	2	Plug, Hex Head, Brass 1/2NPT	-

Steel Base Frame "TTB" Style Mounts M65C13

UCI 224 & UCI 274 GENERATORS

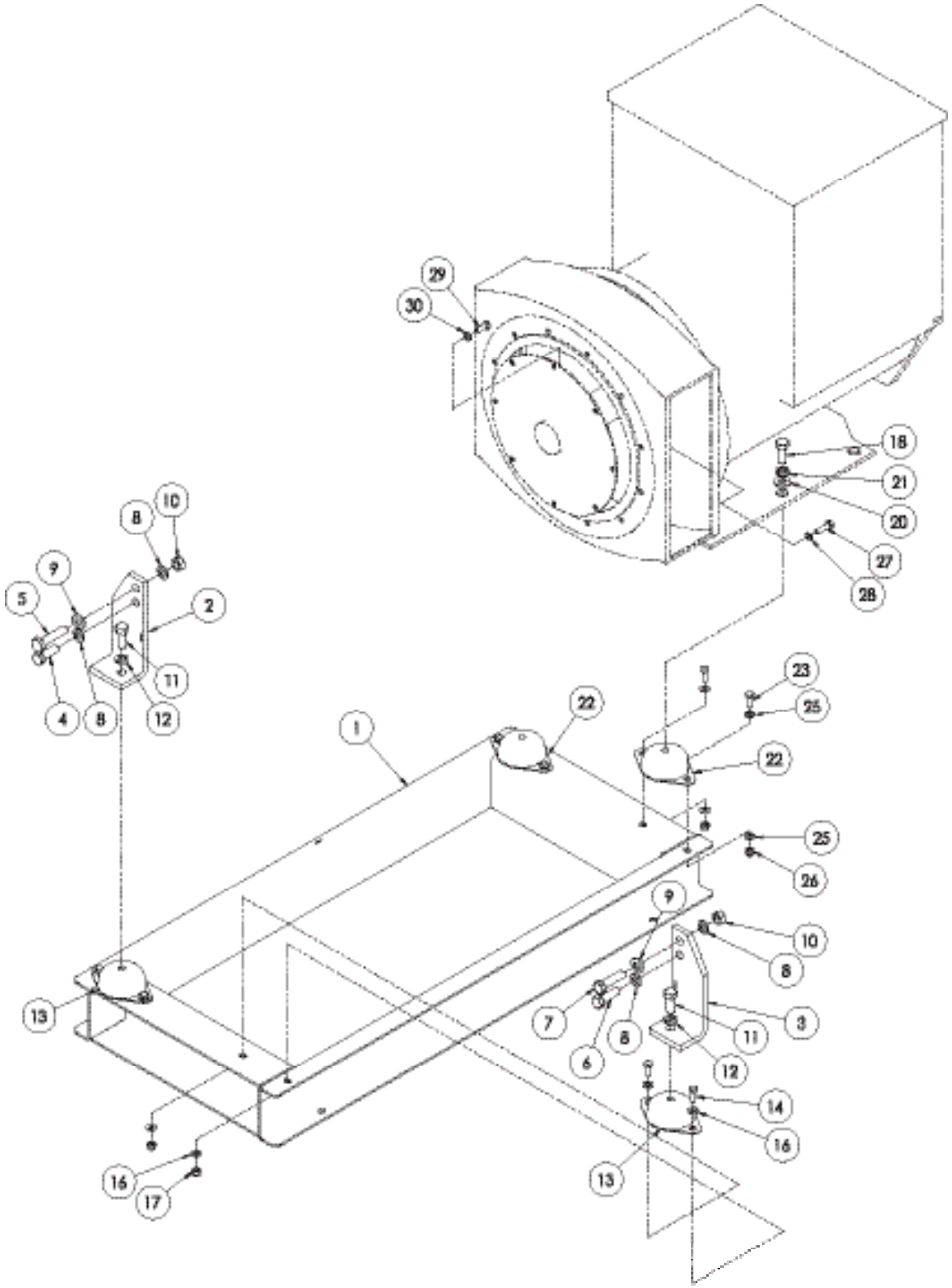

D-4697

Steel Base Frame "TTB" Style Mounts M65C13

UCI 224 & UCI 274 GENERATORS

KEY	PART NUMBER	QTY	DESCRIPTION	SERIAL NUMBER
1	39-89429	1	Base Frame, Steel UCI 224	-
	39-89427	1	Base Frame, Steel UCI 274	-
2	23-89417	1	Bracket, Front Engine Mount R.H.	-
3	23-89418	1	Bracket, Front Engine Mount L.H.	-
4	12-01508	1	Capscrew, Hex Head M16 x 2.0 x 45 mm	-
5	12-01512	1	Capscrew, Hex Head M16 x 2.0 x 70 mm	-
6	12-01503	1	Capscrew, Hex Head M16 x 2.0 x 50 mm	-
7	12-01504	1	Capscrew, Hex Head M16 x 2.0 x 60 mm	-
8	15-01000	4	Lock Washer, Helical M16	-
9	01643-31645	2	Flat Washer M16 Hardened	-
10	14-01432	2	Hex Nit M16 x 2.0	-
11	12-00913	2	Capscrew, Hex Head 5/8-11 x 1-1/2"	-
12	15-00802	2	Lock Washer, Helical 5/8"	-
13	22-81020	2	Flex Mount, Captive,Neoprene 250-500 lbs, UCI 224	-
	22-70121	2	Flex Mount, Captive, Neoprene 500-750 lbs, UCI 274	-
14	12-00312	4	Capscrew, Hex Head 3/8-16 x 1"	-
16	15-00301	8	Flat Washer, 3/8" USS Zink Plated	-
17	14-00312	4	Hex Nut, Nylock 5/8"	-
18	12-00913	2	Capscrew, Hex Head 5/8-11 x 1-1/2"	-
19	15-04803	2	Lock Washer, Hi-Collar M16	-
20	15-00903	2	Flat Washer 5/8" SAE Hardened	-
21	15-00902	2	Lock Washer, Helical 5/8"	-
22	33-81021	2	Flex Mount, Captive Neoprene 500-750 lbs.	-
23	12-00312	4	Capscrew, Hex Head 3/8-16 x 1"	-
25	15-00301	8	Flat Washer 3/8" USS Zink Plated	-
26	14-00312	4	Hex Nut, Nylock 3/8-16	-
27	12-00814	12	Capscrew, Hex Head M10 x 1.5 x 35 mm	-
28	15-00802	12	Lock Washer, Helical M10	-
29	12-00332	8	Capscrew, Hex Head 3/8 - 16 x 1"	-
30	15-00307	8	Flat Washer, Hardened	-

Steel Base Frame Assembly - Units with PTO

UCI 224 Generator

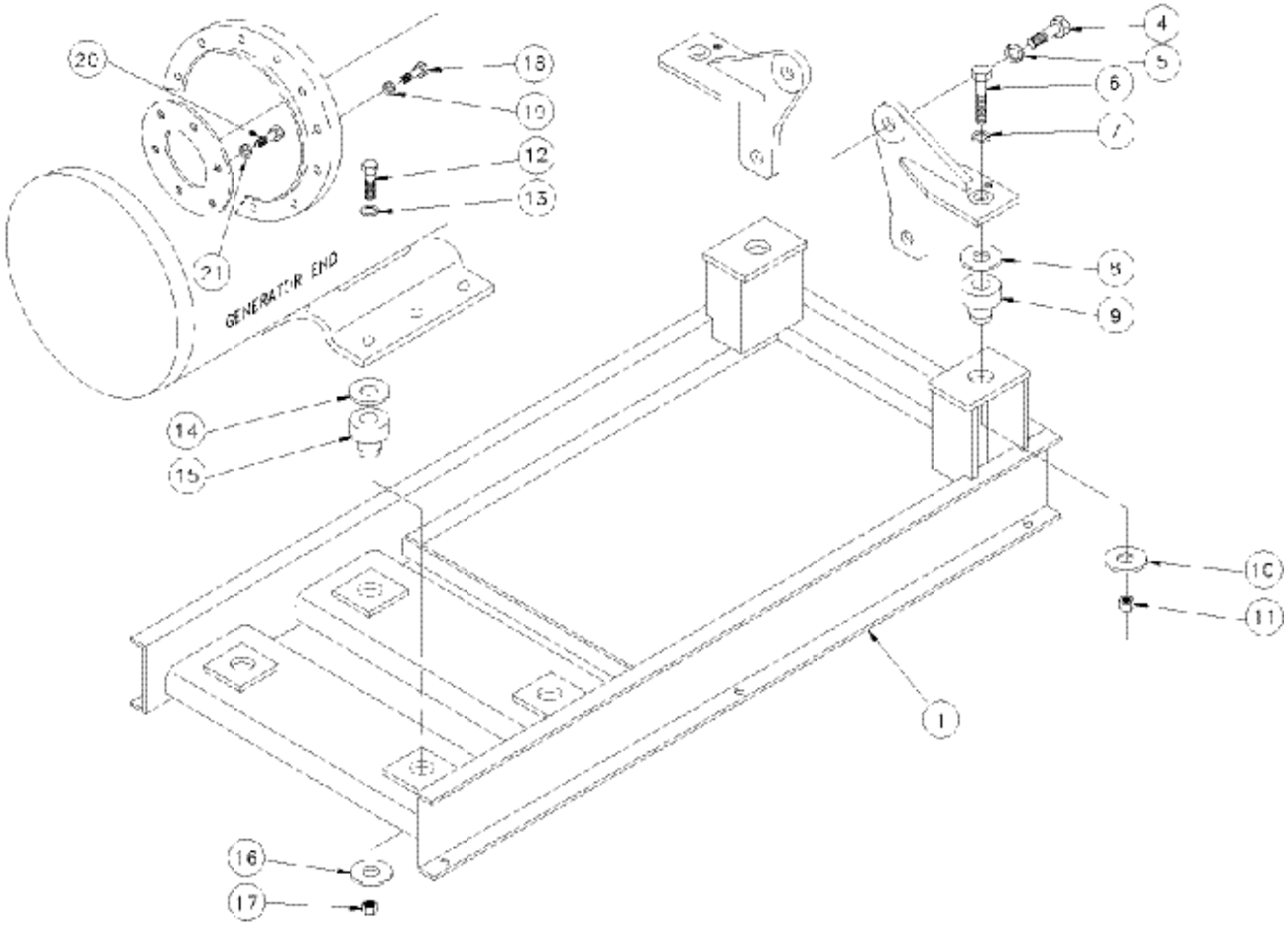

920 Steel Base Frame Assembly - Units with PTO*

UCI 224 GENERATOR

KEY	PART NUMBER	QTY	DESCRIPTION	SERIAL NUMBER
1	39-81013	1	Base Frame, Steel C-Series 4 Cyl UCl224	-
	39-81044	1	Base Frame, Aluminum	
4	12-45001	4	Capscrew, 12 Point M16 x 2.0 x 40mm	-
5	15-04803	4	Lock Washer, Hi-Collar M16	-
6	12-00550	2	Capscrew, Hex Head 1/2 - 13 x 3"	-
7	15-00512	2	Flat Washer 1/2" USS Hardened	-
8	15-00016	2	Head Washer	-
9	33-81054	2	Mount, Centerbonded 400 lbs	-
10	15-00026	2	Tail Washer	-
11	14-00512	2	Hex Nut, Nylock 1/2 - 13 x 3"	-
12	12-00500	4	Capscrew, Hex Head 1/2-13	-
13	15-00512	4	Flat Washer 1/2" USS Hardened	-
14	15-00016	4	Head Washer	-
15	33-81054	4	Mount, Centerbonded 400 Lbs	-
16	15-00026	4	Tail Washer	-
17	14-00512	4	Hex Nut, Nylock 1/2-13	-
18	12-00814	12	Capscrew, Hex Head M10 x 1.5 x 35 mm	-
19	15-00802	12	Lock Washer, Helitical M10	-
20	12-00332	8	Capscrew, Hex Head 3/8-16 x 1" Grade 8	-
21	15-00307	8	Flat washer 3/8" / M10 Hardened	-
22	15-00510	6	Lock Washer, Hi-Collar 1/2"	-

* Frames may also be provided on request without PTO option. Verification can be confirmed by unit serial number.

Steel Base Frame Assembly - Units with PTO

UCI 274 GENERATOR

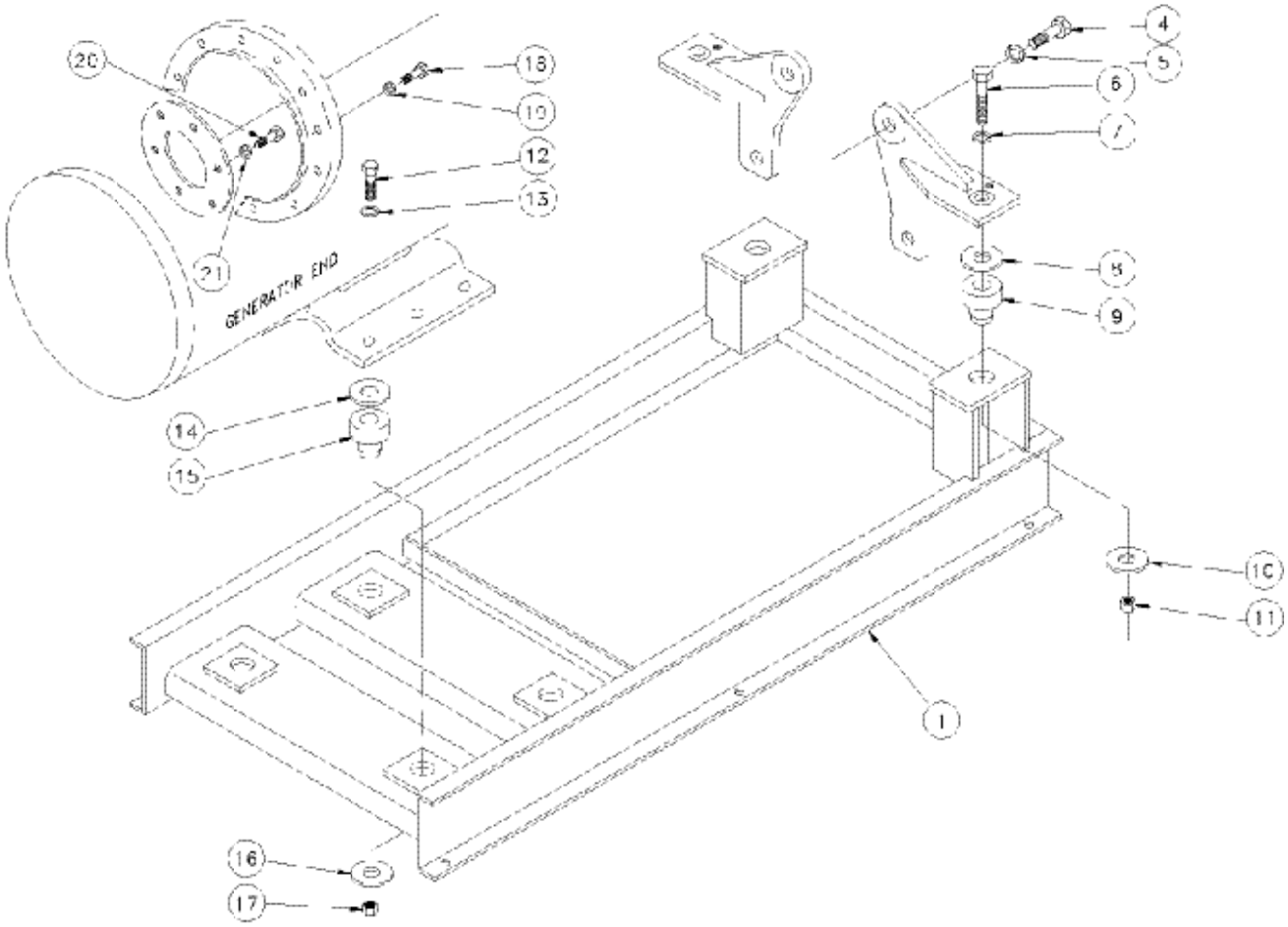

920 Steel Base Frame Assembly - Units with PTO

UCI 274 GENERATOR

KEY	PART NUMBER	QTY	DESCRIPTION	SERIAL NUMBER
1	39-89424	1	Base Frame, Steel C-Series 4 Cyl UCI224	-
4	12-45001	4	Capscrew, 12 Point M16 x 2.0 x 40mm	-
5	15-04803	4	Lock Washer, Hi-Collar M16	-
6	12-00034	2	Capscrew, Hex Head 5/8-11 x 3-1/2"	-
7	15-00903	2	Flat Washer 5/8" USS Hardened	-
8	15-00015	2	Head Washer	-
9	33-81008	2	Mount, Centerbonded 650 lbs	-
10	15-00025	2	Tail Washer	-
11	14-00912	2	Hex Nut, Nylock 5/8 - 11	-
12	12-00034	4	Capscrew, Hex Head 5/8 - 11 x 3-1/2"	-
13	15-01330	4	Flat Washer 5/8" SAE	-
14	15-00015	4	Head Washer	-
15	33-81002	4	Mount, Centerbonded 500 Lbs	-
16	15-00025	4	Tail Washer	-
17	14-00912	4	Hex Nut, Nylock 5/8-11	-
18	12-00814	12	Capscrew, Hex Head M10 x 1.5 x 35 mm	-
19	15-00802	12	Lock Washer, Helitical M10	-
20	12-00332	8	Capscrew, Hex Head 3/8-16 x 1" Grade 8	-
21	15-00307	8	Flat washer 3/8" / M10 Hardened	-

PTO/Electric Clutch 700 Lbs FT MMC C-Spline 24V

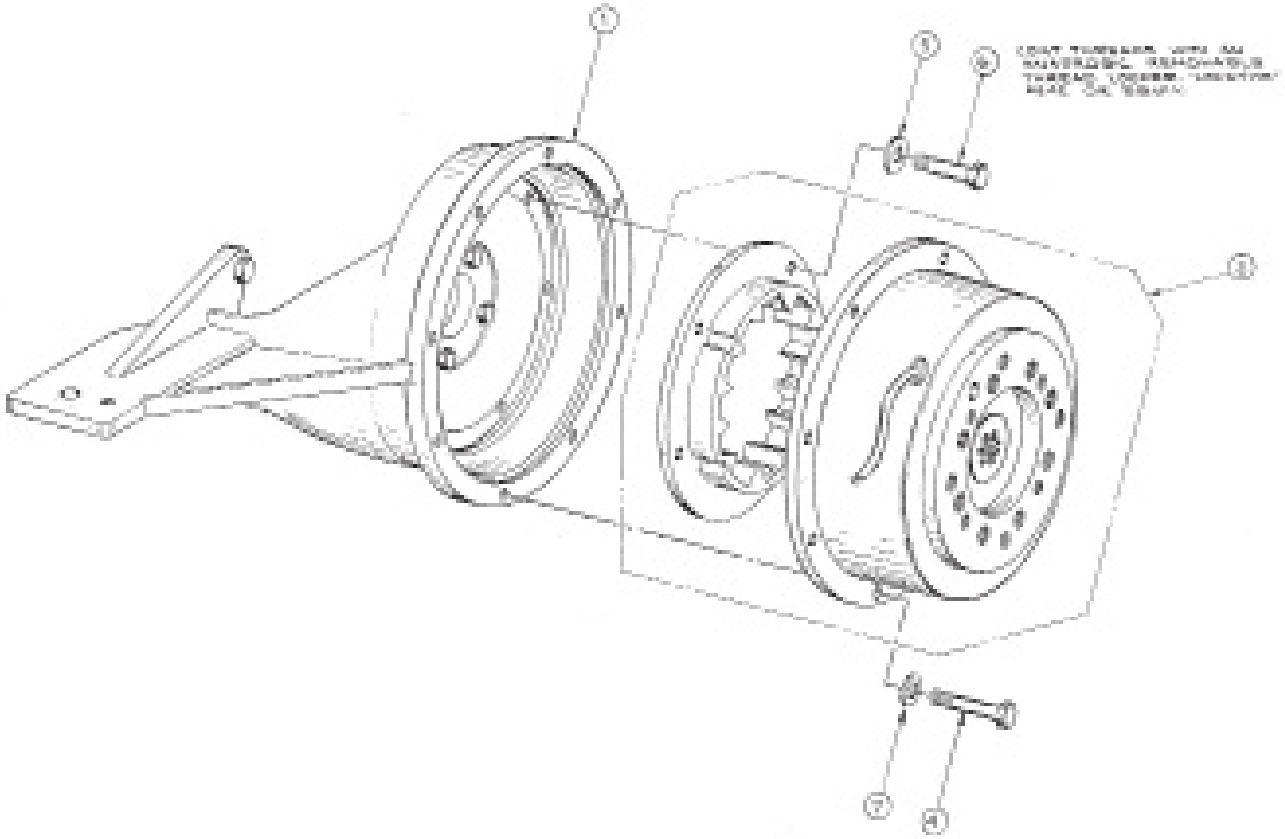

PTO/Electric Clutch 700 Lbs FT MMC C-Spline 24V

KEY	PART NUMBER	QTY	DESCRIPTION	SERIAL NUMBER
1	31-69405	1	PTO Adapter Parts SAE #5/#8 (See Parts Detail)*	-
2	34-69545	1	Electric Clutch 700 lbs FT MMC-100 C-Spline 24V (See Parts Detail)*	-
	34-61615	1	Electric Clutch 700 lbs Foot H-44 C-Spline 12 Volt (See Parts Detail)*	-
	34-61625	1	Electric Clutch 700 lbs Foot H-44 C-Spline 24 Volt (See Parts Detail)*	-
4	12-20313	8	Capscrew, Skt Hd 3/8-16 x 1-1/4" Zinc Plated ASTM A574	-
5	15-00321	6	Flat WAsher 3/8" SAE Zinc Plated ANSI Type A (Narrow)	-
6	12-00312	6	Capscrew, Hex Head 3/8-16 x 1"	-
7	15-00307	8	Flat Washer, 3/8" / M10 Hardened	-

PTO Adapter Parts SAE#5/#8

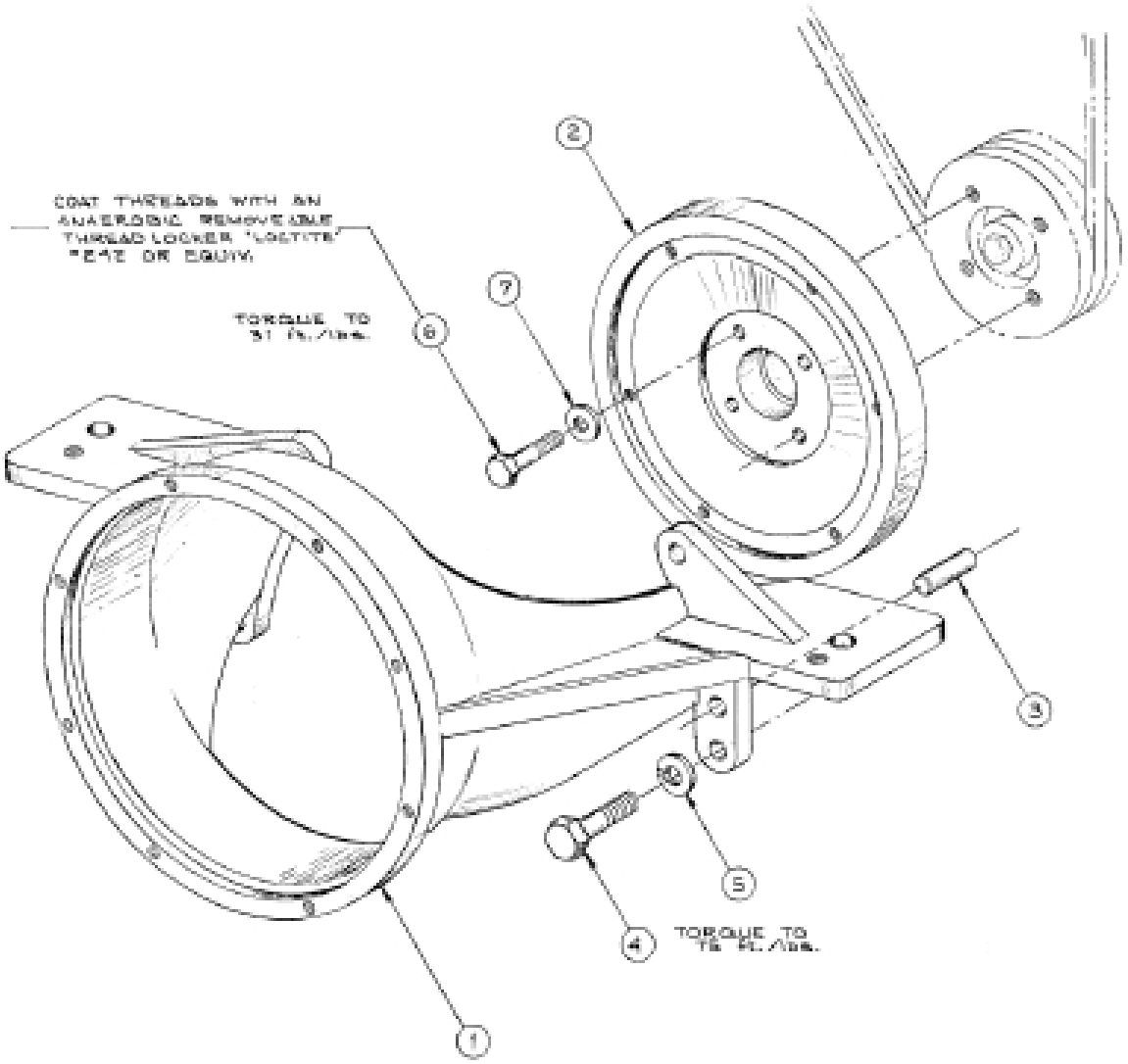

PTO Adapter Parts SAE#5/#8

KEY	PART NUMBER	QTY	DESCRIPTION	SERIAL NUMBER
1	23-71001	1	Bracket, Front PTO Mounting SAE#5	-
2	34-69401	1	PTO Carrier SAE#8	-
3	32-81001	2	Dowel Pin 5/8" OD x 1-1/2"	-
4	12-45001	4	Capscrew, 12 Point M16 x 2.0 x 40 mm *	-
5	15-04803	4	Lock Washer, Hi-Collar M16*	-
6	19M8162	6	Capscrew, Hex Head Flanged M10 x 1.5 x 40 mm	-

* Formerly Hex Head Capscrews
- Changed due to revised bracket 23-71001

Electric Clutch 700 Lbs MMC-100 C-spline 24 Volt

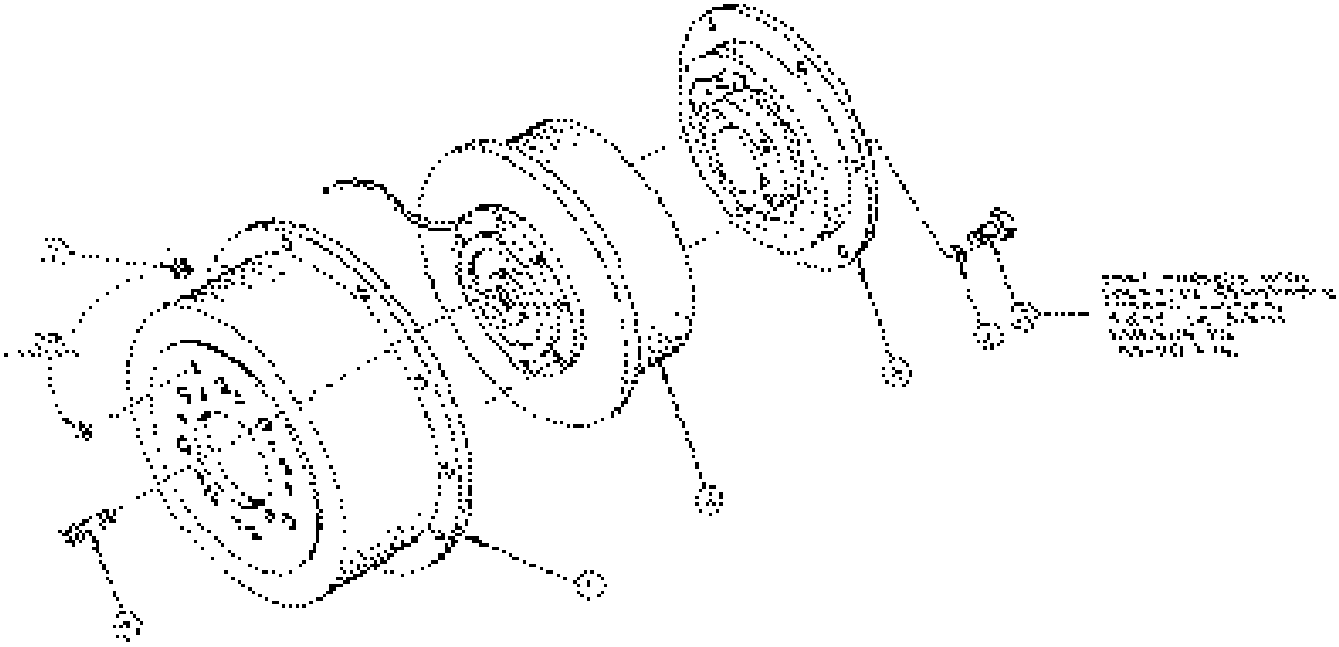

Electric Clutch 700 Lbs MMC-100 C-spline 24 Volt

KEY	PART NUMBER	QTY	DESCRIPTION	SERIAL NUMBER
1	10-60016	1	Housing, Electric Clutch	-
2	34-69517	1	Rubber Block Drive Assembly	-
3	34-60098	1	Electric Clutch Assembly	-
4	12-00035	8	Capscrew, Hex Head 3/8-16 x 1-1/4"	-
5	12-50413	4	Capscrew, Hex Head 7/16-20 x 1"	-
6	15-00404	4	Flat Washer 7/16" SAE	-
7	00-61003	1	Grommet	-
8	00-40025	1	Plug (not shown)	-

Electric Clutch H-44 C-spline 12 & 24 Volt

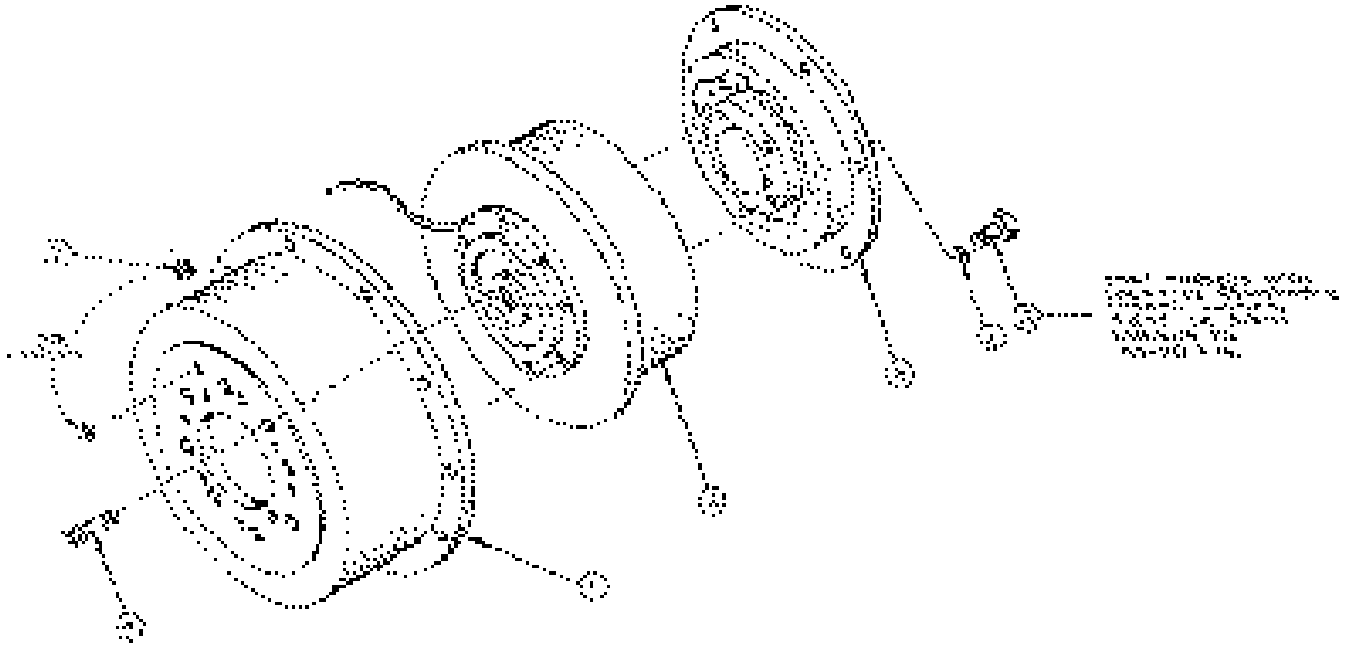

Electric Clutch H-44 C-spline 12 & 24 Volt

KEY	PART NUMBER	QTY	DESCRIPTION	SERIAL NUMBER
1	10-60003	1	Housing, Electric Clutch	-
2	34-69512	1	Rubber Block Drive Assembly	-
3	34-60036	1	Electric Clutch Assembly 12 Volt	-
	34-60037	1	Electric Clutch Assembly 24 Volt	
4	12-00035	8	Capscrew, Hex Head 3/8-16 x 1-3/4"	-
5	12-60001	4	Capscrew, Hex Head 7/16-20 x 1"	-
6	15-00404	4	Flat Washer 7/16" SAE	-
7	00-61003	1	Grommet	-
8	00-40025	1	Plug (not shown)	-

Low Oil Level Switch / Gauge, ISO Ground, Right Hand

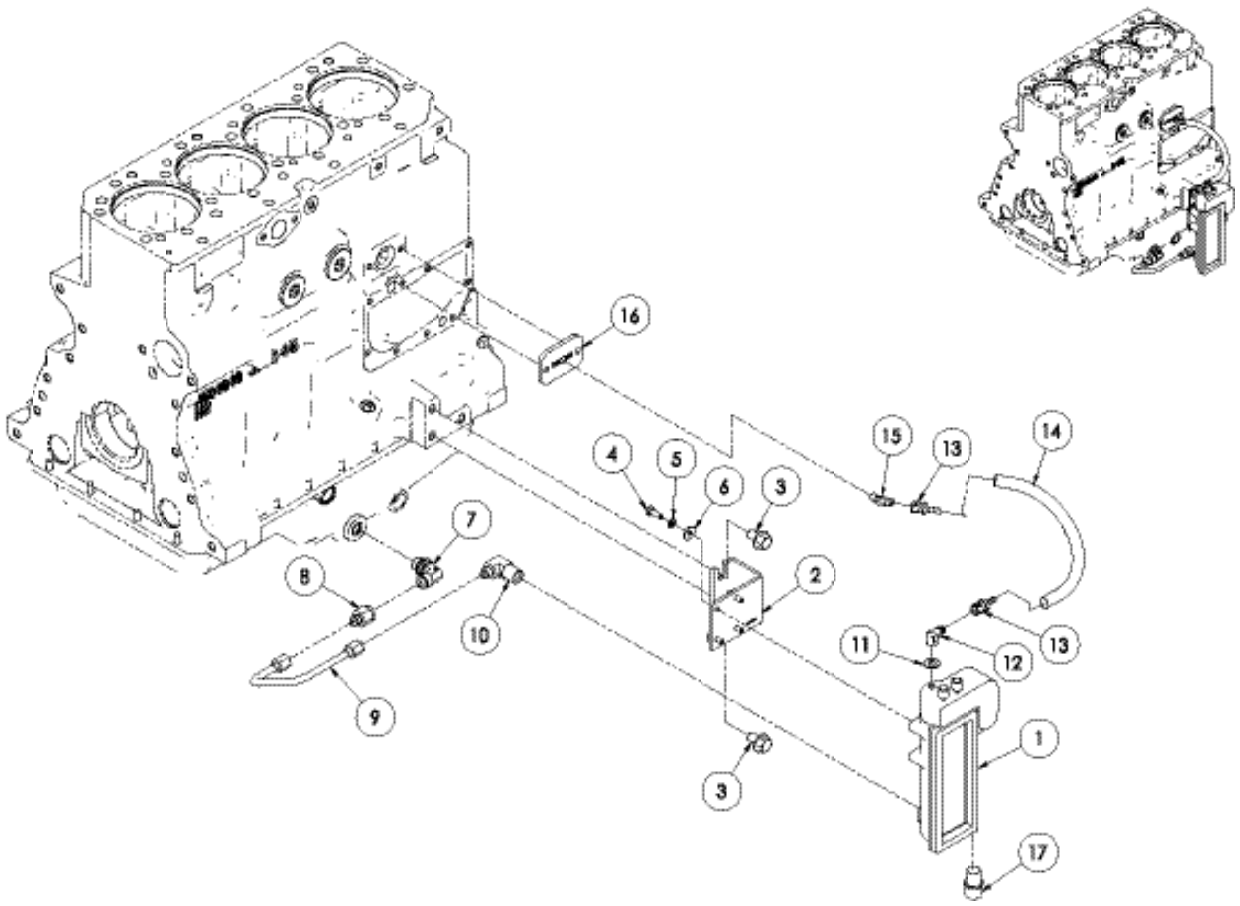

KEY	PART NUMBER	QTY	DESCRIPTION	SERIAL NUMBER
1	22-10004	1	Oil Level Switch/Gauge,Iso Ground	-
2	23-79404	1	Bracket	-
3	19M7787	2	Capscrew, Hex Head Flanged M12x1.75 X 20 mm Grade 10.9	-
4	12-00111	4	Capscrew, Hex Head 1/4-20 X 3/4"	-
5	15-00102	4	Lock Washer,Helical 1/4"	-
6	15-00111	4	Flat Washer 1/4" USS	-
7	21-70022	1	Male Elbow 90,Stl. M18x1.5 X 1/2-37T	-
8	21-64917	1	Tube Reducer,Stl. 1/2-37T X 3/8-37T	-
9	27-09407	1	Tube Assembly	-
10	21-70011	1	Male Elbow 90°,Steel 1/2NPT X 3/8-37T	-
11	15-09805	1	Flat Washer M10, 316 S/S	-
12	21-92200	1	Female Elbow 90°, Brass 1/8NPT X 1/4-45T	-
13	21-71045	2	Female Swivel, Brass 1/4HB X 1/4-45T	-
14	41-01011	11	Hose 1/4" ID	-
15	21-54801	1	Male Elbow 45°, Brass 1/8NPT X 1/4-45T	-
16	28-71002	1	Plate	-
17	00-40016	1	Strain Relief Connection	-

Low Coolant Level Switch/ Gauge, Isolated Ground

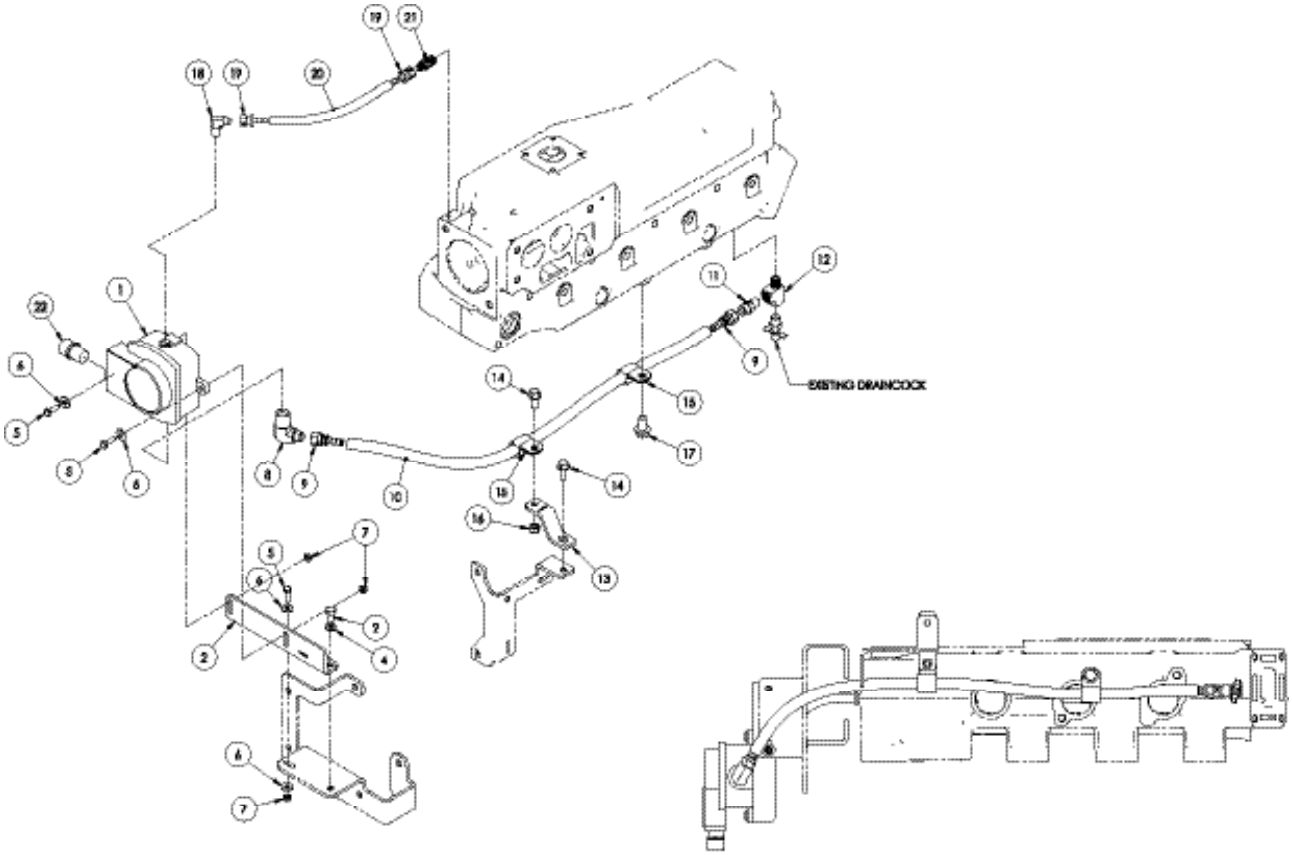

KEY	PART NUMBER	QTY	DESCRIPTION	SERIAL NUMBER
1	22-10003	1	Coolant level switch/gauge, Isolated ground	-
2	23-19461	1	Bracket	-
3	12-19751	2	Capscrew, hex head M8 x 1.25 x 16mm S/S	-
4	15-00705	1	Lock washer, helical M8 S/S	-
5	12-09131	3	Capscrew, hex head M6 x 1.0 x 20 mm S/S	-
6	15-00101	4	Flat washer 1/4" USS S/S	-
7	14-01133	3	Hex nut, Nylock M6 x 1.0 S/S	-
8	21-70011	1	Male elbow, 90, steel 1/2NPT x 3/8-37T	-
9	21-71034	2	Female swivel, brass 3/8HB x 3/8-37T	-
10	41-01020	1	Hose 3/8" ID	-
11	21-00612	1	Male connector, steel 1/4 NPT x 3/8-37T	-
12	21-52207	1	Street tee, brass 1/4 NPT	-
13	23-19412	1	Bracket	-
14	19M7866	2	Capscrew, hex head flanged M8 x 1.25 x 20 mm	-
15	19-41900	2	Adelle clamp 3/4" ID x 3/8"	-
16	14-04802	1	Hex nut, Nylock M8 x 1.25	-
17	19M7784	1	Capscrew, hex head flanged M10 x 1.5 x 20 mm	-
18	21-71044	1	Male elbow 90, brass 1/4NPT x 1/4-45T	-
19	21-71045	2	Female swivel, brass 1/4 HB 1/4-45T	-
20	41-01011	1	Hose 1/4 ID	-
21	21-52208	1	Male connector brass 1/4 NPT x 1/4-45T	-
22	00-40016	1	Strain relief connection	-
23	23-19461	4	Adapter	-

2" Raw Water Flow Switch H.E. *

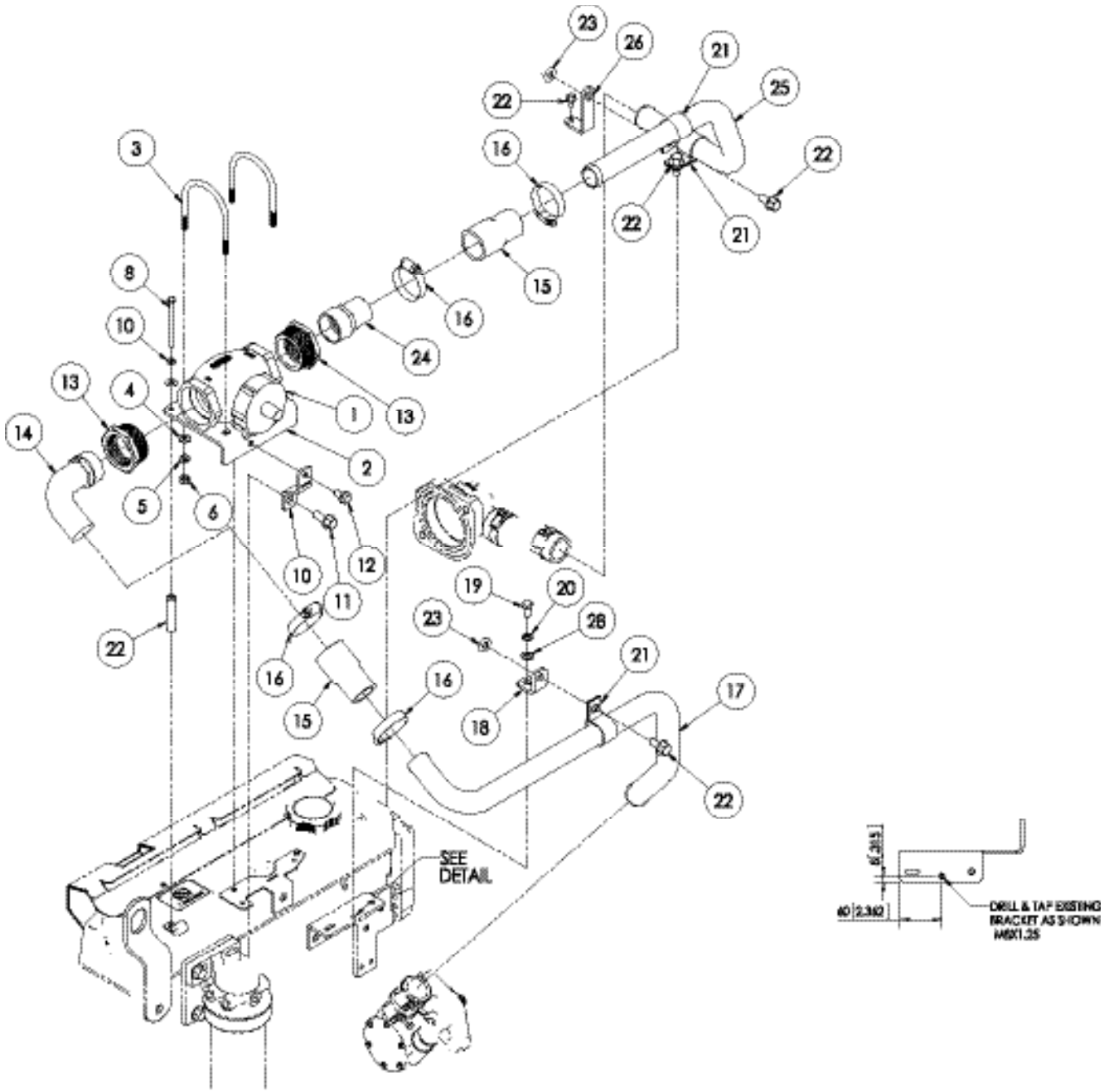

C-7129A

2" Raw Water Flow Switch H.E. *

KEY	PART NUMBER	QTY	DESCRIPTION	SERIAL NUMBER
1	37-15001	1	Flow switch, bronze 15 GPM 2"NPT	-
2	23-19416	1	Bracket 2"	-
3	19-15001	2	U-bolt clamp 3"ID x 5/16"-18 S/S	-
6	14-00213	4	Hex nut 5/16-18	-
7	21-19402	2	Spacer	-
8	12-01127	2	Capscrew, hex head M6 x 1.0 x 80 mm	-
9	15-01132	4	Lock washer, helical M6	-
10	23-19412	1	Bracket	-
11	19M7785	1	Capscrew, hex head flanged M10 x 1.5 x 25 mm	-
12	19M7865	1	Capscrew, hex head flanged M8 x 1.25 x 16 mm	-
13	21-00076	2	Bushing, brass 2"NPT x 1-1/2NPT	-
14	21-15036	1	Male elbow, 90, bronze 1-1/2"NPT x 1-1/2" HB	-
15	R530044	2	Hose 1-1/2"ID x 1-1/4 x 3-1/4" LOA	-
16	19-00028	4	Hose clamp #28 S/S	-
17	27-19409	1	Tube, flow switch inlet	-
18	23-19414	1	Bracket, tube support	-
19	12-00752	1	Capscrew, hex head M8 x 1.25 x 12 mm	-
20	15-00702	1	Lock washer, helical M8	-
21	19-71031	3	Adelle clamp 1-1/4ID x 1/2" stud	-
22	19M7784	1	Capscrew, hex head flanged M10 x 1.5 x 20 mm	-
23	14-80811	2	Hex nut, flanged M10 x 1.5 x 20 mm	-
24	21-15035	1	Male connector bronze 1-1/2"NPT x 1-1/2" HB	-
25	27-19410	1	Tube, flow switch outlet S/S	-
26	23-19413	1	Bracket, tube support	-
27	19M7774	1	Capscrew, hex head flanged M6 x 1.0 x 12 mm	-
28	15-00701	1	Flat washer M8	-
29	23-09404	1	Bracket	-

* Supplied on unit serial numbers:
0642-51096 & 0642-51097 ONLY

10GPM Raw Water Flow Switch - Heat Exchanged Units - M65T13 & M65C13

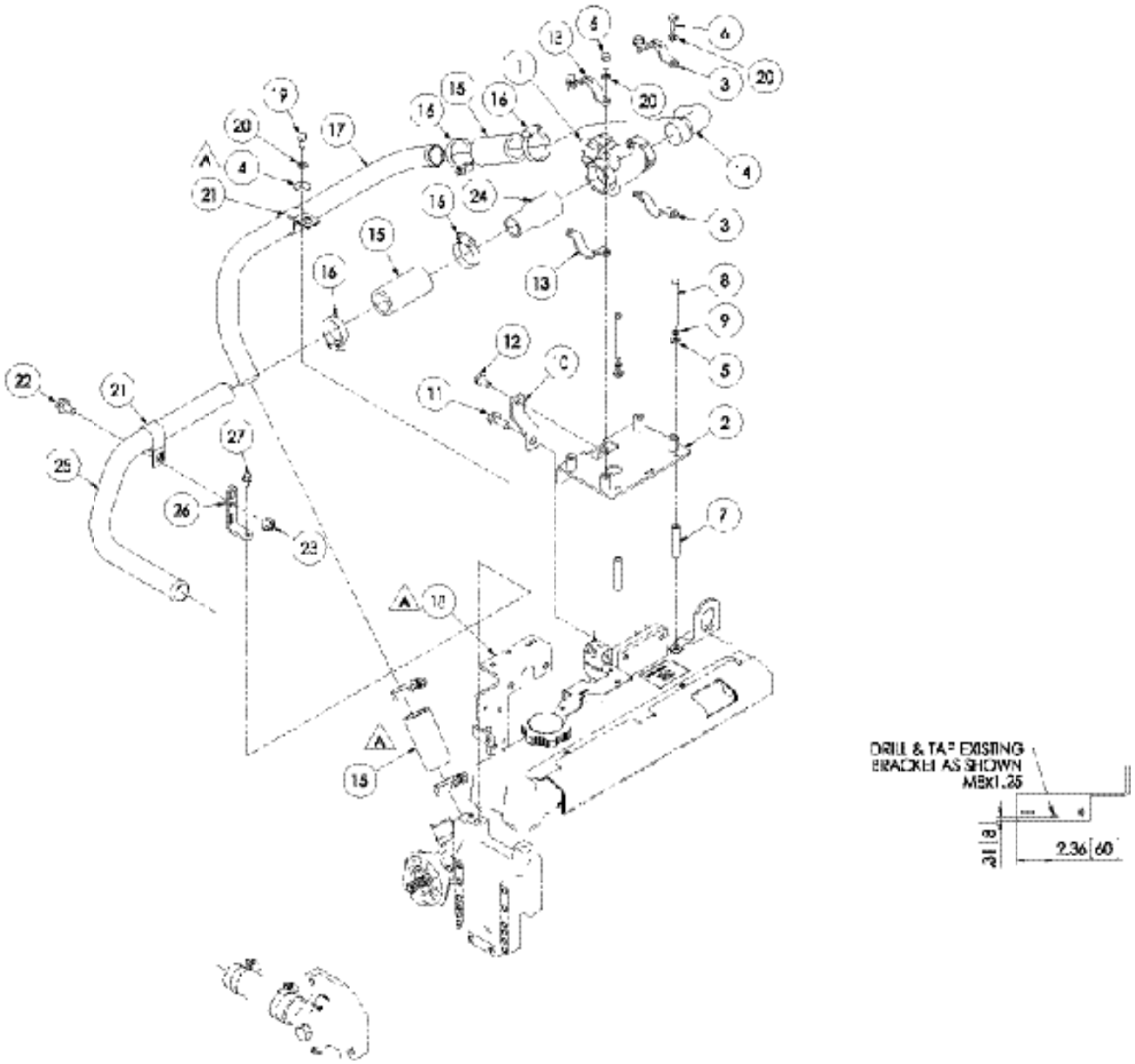

10GPM Raw Water Flow Switch - Heat Exchanged Units - M65T13 & M65C13

KEY	PART NUMBER	QTY	DESCRIPTION	SERIAL NUMBER
1	37-11004	1	Flow Switch, Bronze 10 GPM 1-1/4NPT	-
2	23-19517	1	Bracket, 1-1/4" Flow Switch Mount	-
3	19-11616	2	Pipe Clamp 1"	-
4	15-70004	1	Snubbing Washer S/S	-
5	15-00121	2	Flat Washer 1/4" SAE	-
6	12-00711	4	Capscrew, Hex Head M8 x 1.25 x 20 mm	-
7	21-19402	2	Spacer	-
8	12-01127	2	Capscrew, Hex Head M6 x 1.0 x 80 mm Grade 8.8	-
9	15-01132	2	Lock Washer, Helical M6	-
10	23-19412	1	Bracket	-
11	19M7785	1	Capscrew, Hex Head Flanged M10 x 1.5 x 25 mm Grade 10.9	-
12	19M7865	1	Capscrew, Hex Head Flanged M10 x 1.5 x 16 mm Grade 10.9	-
13	19-12016	2	Pipe Clamp 1-1/4"	-
14	21-15038	1	Male Elbow, 90, Bronze 1-1/4NPT x 1-184" HB	-
15	18-19501	3	Hose 1-1/4" ID x 3-1/2" 3 Ply Silicone	-
16	19-01020	4	Hose Clamp #20 Extended Band S/S	-
17	27-19413	1	Tube, Flow Switch Inlet S/S	-
18	23-09404	1	Bracket, Wire Harness / Tube Support	-
19	12-00751	1	Capscrew, Hex Head M8 x 1.25 x 16 mm	-
20	15-00702	5	Lock Washer, Helical M8	-
21	19-71031	2	Adelle Clamp 1-1/4" ID x 1/2" STUD	-
22	19M7784	2	Capscrew, Hex Head M8 x 1.25 x 16 mm	-
23	14-80811	2	Hex Nut, Flanged M10 x 1.5 Property Class 10	-
24	21-15017	1	Male Connector, Brass 1-1/4NPT x 1-1/4" HB	-
25	17-19414	1	Tube, Flow Switch Outlet S/S (316L)	-
26	23-19413	1	Bracket, Tube Support	-

4420 14th Ave. NW., Seattle WA 98107
Tel: (206) 789-3880 • 1-800-762-0165 • www.northern-lights.com
Northern Lights and Lugger are registered trademarks of Northern Lights, Inc.
© 2020 All rights reserved. Litho USA.