PARTS MANUAL

P864

For Models: M864K, M864W, M864W3 and M864W3G

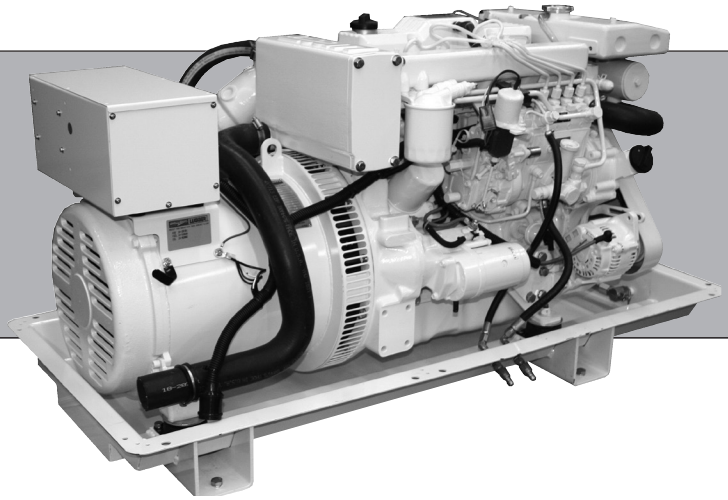

NORTHERN LIGHTS®

www.northern-lights.com

— CALIFORNIA —

Proposition 65 Warning:

Breathing Diesel engine exhaust and some of its constituents are known to the State of California to cause cancer, birth defects, and other reproductive harm.

* Always start and operate the engine in a well-ventilated area.
* If in an enclosed area, vent the exhaust to the outside.
* Do not modify or tamper with the exhaust system.
* Do not idle the engine except as necessary.

For more information, go to www.P65warnings.ca.gov/diesel.

Northern Lights
4420 14th Avenue N.W.
Seattle, WA 98107
Tel: (206) 789-3880
Fax: (206) 782-5455

Copyright ©2022 Northern Lights, Inc.
All rights reserved. Northern Lights™, and the Northern Lights logo are trademarks of Northern Lights, Inc.

Printed in U.S.A.
PART NO.: P864 9/23

PARTS CATALOG
for Models M864K, M864W, M864W3 and M864W3G

Please read thoroughly before attempting to use this manual:

Table of Contents I
Model Designation & Serial Numbers II
Reading a Parts Page III

Table of Contents

GROUP 1 - ENGINE
- Cylinder Block 0
- Flywheel & Housing 1
- Crankshaft, Pistons & Connecting Rods ..... 2 - 3
- Lubrication System 4
- Timing Cover 5
- Camshaft & Valve Train ..... 6 - 7
- Cylinder Head & Valve Cover 8
- Oil Drain / Oil Drain Kit ..... 9 - 10

GROUP 2 - INTAKE & EXHAUST SYSTEM
- Intake Manifold & Air Filter ..... 0 - 1
- Exhaust Manifold 2
- Wet Exhaust Elbow 3
- Dry Exhaust Elbow 4

GROUP 3 - COOLING
- Expansion Tank & Thermostat Housing 1
- Heat Exchanger & Mounting 2
- Heat Exchanger Assembly 3
- Coolant Pump 4
- Keel Cooling Outlet 5
- Raw Water Pump & Mounting 6
- Raw Water Pump Detail 7

GROUP 4 - FUEL SYSTEM
- Injection Pump & Piping 0
- Double Wall Fuel Lines 1
- Fuel Injectors & Return Lines ..... 2, 10 - 11
- Fuel Filter & Lines 3
- Fuel Lines ..... 4 - 8
- Fuel Feed Pump Assembly ..... 12 - 13

GROUP 5 - ELECTRICAL SYSTEM
- Engine ..... 0 - 7
- Stop Solenoid & Mounting 8
- Alternator Mounting ..... 9 - 12
- Alternator Assembly 3
- Starter ..... 14 - 16
- Control Panels ..... 17 - 29
- Belt Guard ..... 30 - 32

GROUP 6 - GASKET SETS
- Gasket Sets 0

GROUP 7 - FRAME & MOUNTING
- Engine Lifting Brackets 1
- Base Frame ..... 2 - 5

GROUP 8 - ACCESSORIES & OPTIONAL EQUIPMENT
- PTO Adapter 1
- Electric Clutch 2
- Oil Level Switch 3
- Oil Drain Kit 4
- Water Level Switch 5

Proprietary Information
This publication is the sole property of Northern Lights, Inc.
It may not be reproduced in whole or part without the expressed written permission of Northern Lights, Inc.
© Northern Lights, Inc. 2023. All rights reserved. Litho U.S.A. Publication number: P864 9/23

Model Designation

MODELS INCLUDED

This manual covers the parts and components used in:

M864K , M864W, M864W3 and M864W3G

Model Numbers

Model numbers give the unit's application, block model, aspiration, and RPM:

M

M - Northern Lights Marine generator set

864

Model number of engine block

Bore	Cylinders
86 mm	**4**

K, W, G, 3

K - Series designation
W - Auxiliary Winding in Generator End
G - GEM series base frame
3 - US EPA Tier III compliant

M864K = Northern Lights Marine diesel generator set with a 864 engine and a PX-325K1 generator end.

M864W = Northern Lights Marine diesel generator set with a 864 engine and a PX-325K2 generator end.

M864W3 = Northern Lights Marine diesel generator set with a 864 engine and a PX-325K2 generator end. US EPA Tier III.

M864W3G = Northern Lights Marine diesel generator set with a 864 engine and a PX-325K2 generator on a Gem Series Base. US EPA Tier III.

Serial Numbers

NORTHERN LIGHTS

Northern Lights generator sets have two data plates and two serial numbers. One serial number is for the generator end, and it is found on the Generator End Data Plate. Units with PXK generators have just one plate. Serial numbers for Northern Lights marine units are nine digits in length (e.g. 8642-56781).

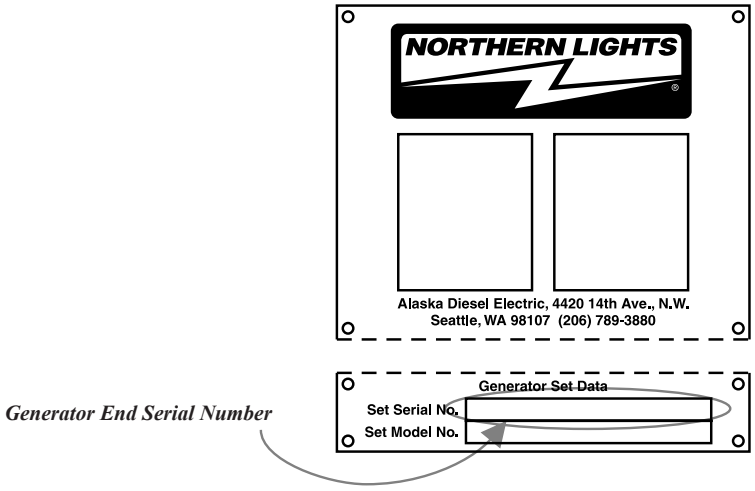

IMPORTANT:

Before selecting parts, be sure that you are choosing parts from the correct page.
Check the model designation at the page top.
Do not use this illustration for parts purchasing.

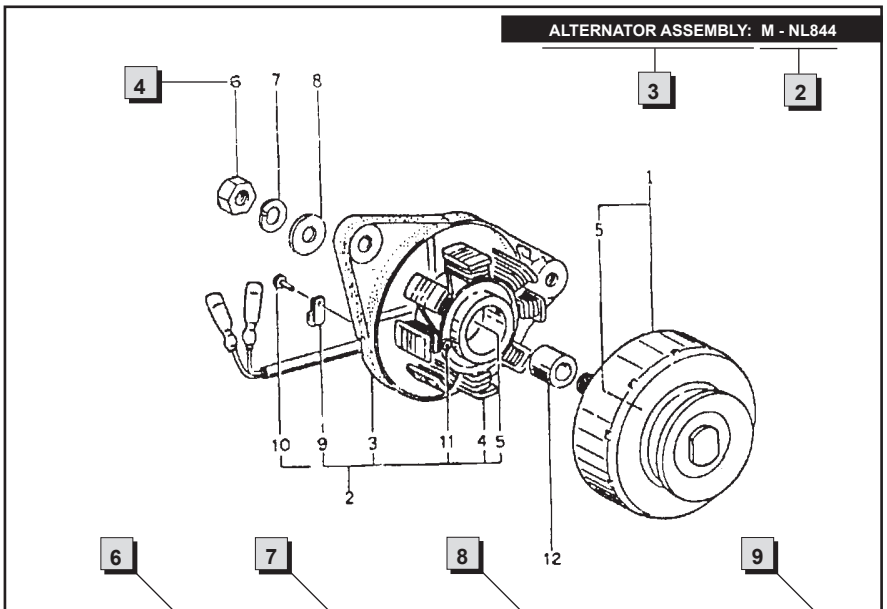

KEY	PART NUMBER	QTY.	DESCRIPTION	SERIALNUMBER
0	185046210	1	Alternator Assembly	-
1	185446219	1	Flywheel, complete	-
2	185446217	1	Plate, complete	-
3	185716200	1	Plate	-
4	185446218	1	Stator, complete	-
5	040126210	2	Bearing	-
6	020210010	1	Nut	-
7	027100010	1	Spring washer	-
8	026100010	1	Washer	-
9	185446220	1	Clamp	-
10	015140408	1	Screw	-
11	015140425	2	Screw	-
12	199236510	1	Collar	-

P844 06/96
5-2

REFERENCES:

1. Grouping section title.
2. Model designation of equipment that uses parts listed on this page.
3. Title and description of assembly.
4. Drawing numbers that correspond to key column numbers for parts identification.
5. Key column for locating parts shown on drawing.
6. Part number.
7. Quantity of parts used.
8. Description of each component part.
9. Serial number of unit the part fits.
10. Assembly or kit designated by Key 0 or ••/•.
11. Grouping index number.
12. Page number within the grouping index.
13. Manual title.
14. Page publication date.

NOTE: ◀ Arrows always point toward the front of the engine.

Cylinder Block

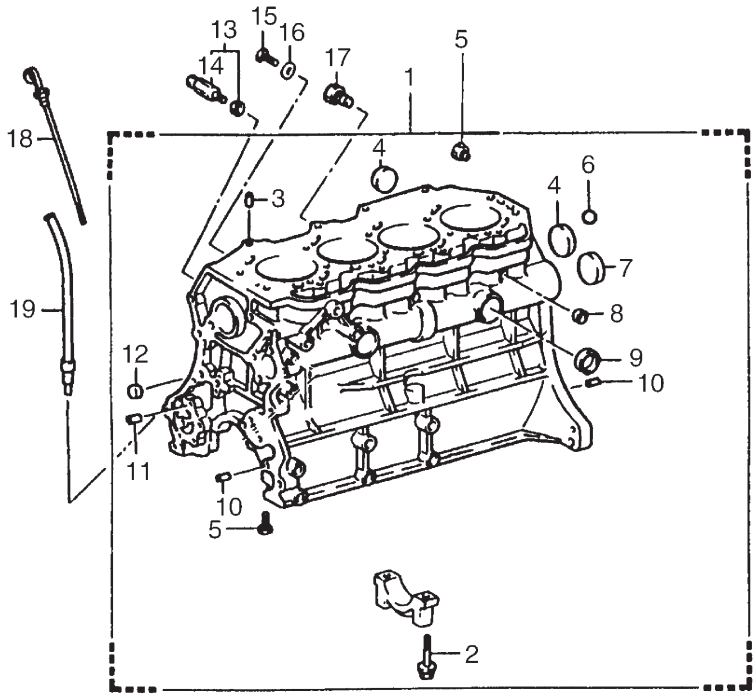

Fig. 1105

KEY	PART NUMBER	QTY	DESCRIPTION	ENGINE BLOCK S/N
1	04911-20440-71	1	Cylinder Block Assembly (includes keys 2-12) *	-
2	90910-02061	10	Bolt	-
3	9001A-24002	2	Pin (former # 90253-15950-71)	-
4	86411-76007-71	4	Expansion Plug (former # 96411-44000)	-
5	60345-76010-71	**	Plug	-
6	9001A-3B004	2	Ball (former # 90360-14950-71)	-
7	80331-76033-71	1	Expansion Plug (former # 90331-51032)	-
8	86411-76014-71	4	Expansion Plug (former # 96411-42000)	-
9	86411-76006-71	2	Expansion Plug (former # 96411-43500)	-
10	90250-01820	6	Pin	-
11	90250-06068	2	Pin	-
12	86411-76017-71	2	Expansion Plug (former # 96411-11400)	-
13	86431-76001-71	1	Drain Cock (Includes key #14) (former # 96431-53828)	-
14	96432-23814	1	Plug	-
15	96341-10002	1	Bolt	-
16	80430-76002-71	1	Gasket (former # 90430-10027)	-
17	21-00050	1	Plug 1/8 BSPT	-
18	15301-UC040	1	Dipstick (former # 15301-78207-71)	-
19	11452-UD010	1	Dipstick Tube (former # 11452-78700-71)	-
20	11461-78200-71	4	Cylinder Liner Mark A	-
	11461-78201-71	4	Cylinder Liner Mark B	-
			* Note: Includes cylinder block 11401-78210-71 & Plug 90345-51950-71	
			**As required	

Flywheel and Housing

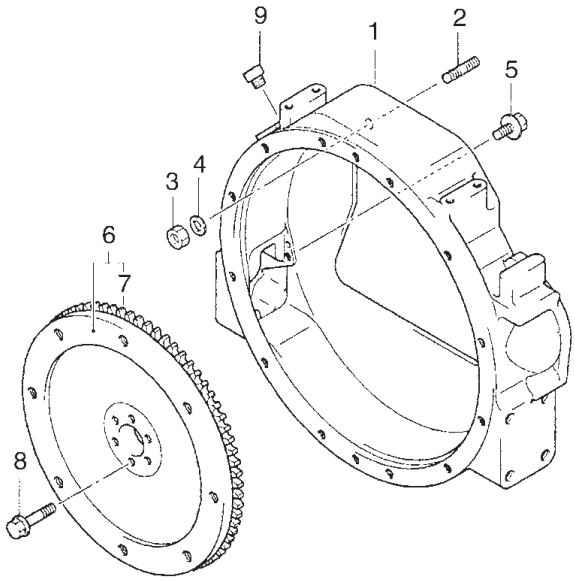

Fig. 3101-137

KEY	PART NUMBER	QTY	DESCRIPTION	SERIAL NUMBER
1	11351-UC010	1	Flywheel Housing SAE #4 (former # 11351-78200-71)	-
2	9001A-15014	2	Stud (former # 90116-12950-71)	-
3	94115-51200	2	Nut	-
4	84512-76008-1	2	Washer	-
5	81672-76023-1	2	Bolt	-
6	13405-UC010	1	Flywheel Assembly SAE #7-1/2 (former # 13405-78203-71)	-
7	13453-22060-71	1	Ring Gear (108 Teeth)	-
8	80105-76037-71	6	Capscrew, Hex Flange M12 x 1.25 (former # 90105-12039)	-
9	90341-20002	**	Plug, Socket Head M20 x 1.5	-

**As required

Crankshaft, Pistons & Connecting Rods

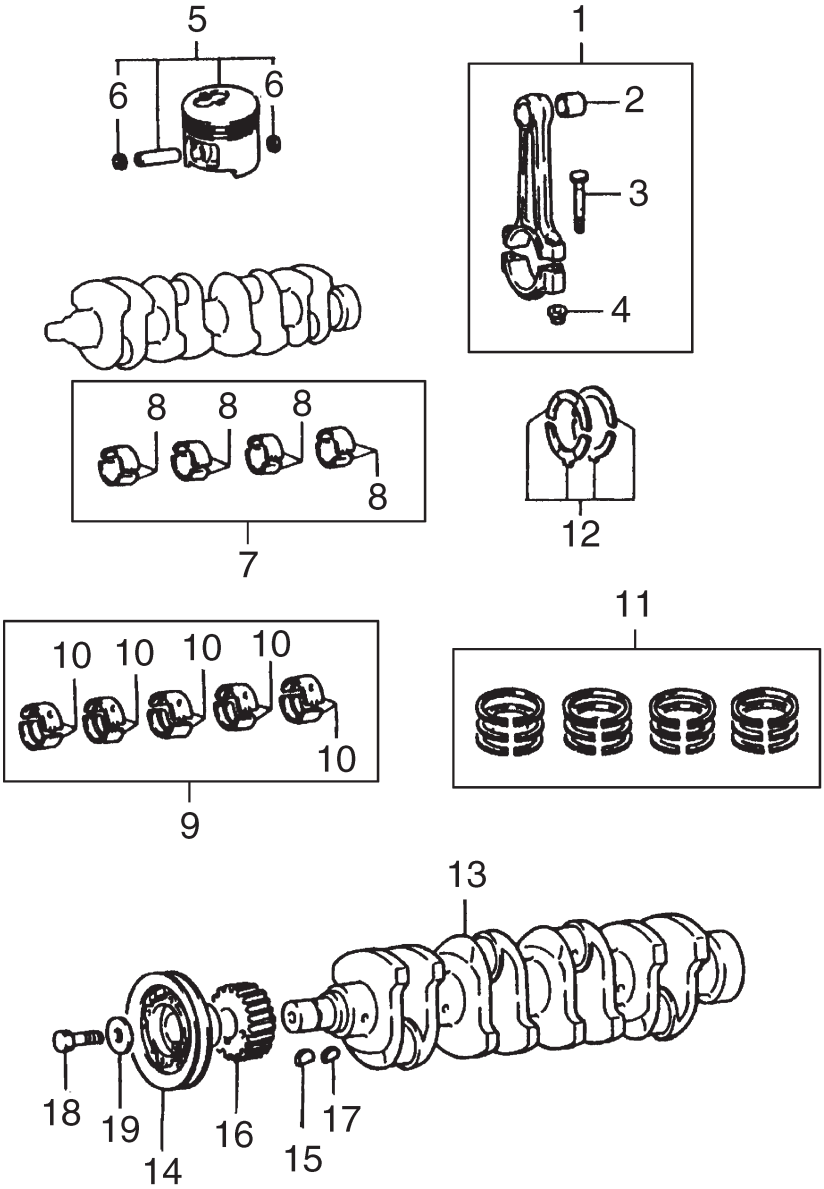

Fig. 1301

Crankshaft, Pistons & Connecting Rods

KEY	PART NUMBER	QTY	DESCRIPTION	ENGINE BLOCK S/N
1	13201-UC010	4	Connecting Rod Assembly (Includes keys 2 - 4) (former #13201-78201-71)	-
2	90999-73950-71	4	Bushing	-
3	13265-44011	8	Bolt	-
4	80179-76035-71	8	Nut Former #90179-10042	-
5	13101-UC010	4	Piston Assembly, Standard (includes key #6) (former # 13101-78202-71)	-
	13103-UC010	4	Piston Assembly, 0.50 mm O/S (includes key #6) (former # 13103-78202-71)	-
	13105-UC010	4	Piston Assembly 1.00 mm O/S (former #13105-78202-71)	-
6	80521-76006-71	8	Snap Ring Former #90521-29003	-
7	13204-78201-71	1	Connecting Rod Bearing Set, 0.25 mm, Undersize (former # 13204-78200-71)	-
	13205-78201-71	1	Connecting Rod Bearing Set, 0.50 mm, Undersize (former # 13205-78200-71)	-
8	13041-78203-71	4	Connecting Rod Bearing, Mark 1 - Standard (former #13041-78200-71)	-
	13041-78204-71	4	Connecting Rod Bearing, Mark 2 - Standard (former #13041-78201-71)	-
	13041-78205-71	4	Connecting Rod Bearing, Mark 3 - Standard (former #13041-78202-71)	
			Note: Standard size connecting rod bearings must be matched to rods stamped with Mark 1, Mark 2 or Mark 3.	
9	11704-78201-71	1	Main Bearing Set, 0.25 mm, Undersize	-
	11705-78201-71	1	Main Bearing Set, 0.50 mm, Undersize	-
	11706-78201-71	1	Main Bearing Set, 0.75 mm, Undersize	-
	11707-78202-71	1	Main Bearing Set, 1.00 mm, Undersize (former # 11707-78201-71)	-
10	11701-78209-71	5	Main Bearing, Mark 1 - Standard (former #11701-78203-71)	-
	11701-78210-71	5	Main Bearing, Mark 2 - Standard (former #11701-78204-71)	-
	11701-78211-71	5	Main Bearing, Mark 3 - Standard (former #11701-78205-71)	-
	11701-78212-71	5	Main Bearing, Mark 4 - Standard (former #11701-78206-71)	
	11701-78213-71	5	Main Bearing, Mark 5 - Standard (former #11701-78207-71)	
	11701-78208-71	5	Main Bearing, Mark 6 - Standard	
			Note: Standard size main bearings must be matched to cylinder blocks with bearing caps stamped with Mark 1 through Mark 6.	
11	13011-UC010	1	Piston Ring Set, Standard (former #13011-78202-71)	-
	13013-78202-71	1	Piston Ring Set, 0.50 mm, Oversize	-
	13015-78202-71	1	Piston Ring Set, 1.00 mm, O/S	
12	11011-UC010	1	Thrust Washer Set, Standard Only (former #11011-78201-71)	-
	11012-78201-71	1	Thrust Washer Set O/S, 0.125 mm	-
	11013-78201-71	1	Thrust Washer Set O/S, 0.25 mm	-
13	13411-UC010	1	Crankshaft (former # 13411-78201-71)	-
14	13471-UC040	1	Crankshaft Pulley - Standard (former # 13471-78205-71)	-
15	85161-76001-71	1	Key (former #95161-10519)	-
16	13521-UC010	1	Crankshaft Timing Gear (former # 13521-78202-71)	-
17	85161-76001-71	1	Key (former # 95161-10519)	-
18	80105-75055-71	1	Capscrew Hex Head Flanged M14 x 1.5 x 35mm (former # 91511-61435)	-
19	80201-76069-71	1	Plate Washer (former # 90201-14007)	-

Lubrication System Components

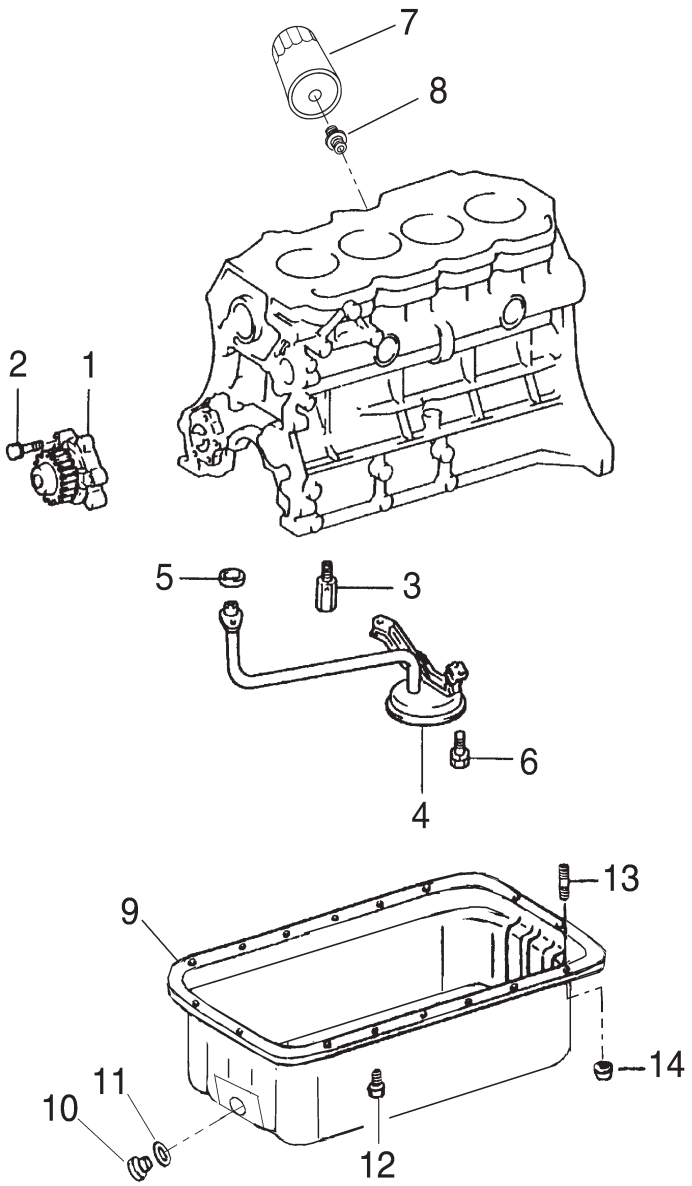

Fig. 1501/1502

KEY	PART NUMBER	QTY	DESCRIPTION	SERIAL NUMBER
1	15100-UC020	1	Oil Pump Assembly (former # 15100-78202-71)	-
2	81551-76025-71	3	Bolt M8 x 1.25 x 25 mm	-
3	15310-UC010	1	Oil Regulator	-
4	15104-UC020	1	Oil Pickup Assembly	-
5	9001A-45007	1	Gasket (former # 90430-17950-71)	-
6	91621-60814	3	Bolt	-
7	24-02002	1	Oil Filter (former #24-08701)	-
8	80404-78011-71	1	Union M20 x 1.5 x 3/4 - 16 (former #90404-20173)	-
9	12101-UC030	1	Oil Pan (Laminated Construction) (former #12101-78250-71)	-
10	36-75402	1	Adapter, Oil Drain Connection	-
11	90430-25001-71	**	Gasket (for Oil Pan drain plug joint)	-
12	90119-08956-71	14	Bolt w/ Washer	-
13	80116-76044-71	2	Stud M8 x 1.25 20 mm (30 mm LOA) (former # 90116-08112)	-
14	80179-76003-71	2	Nut (former # 90179-08061)	-
			** As Required	

Timing Cover & Rear Seal

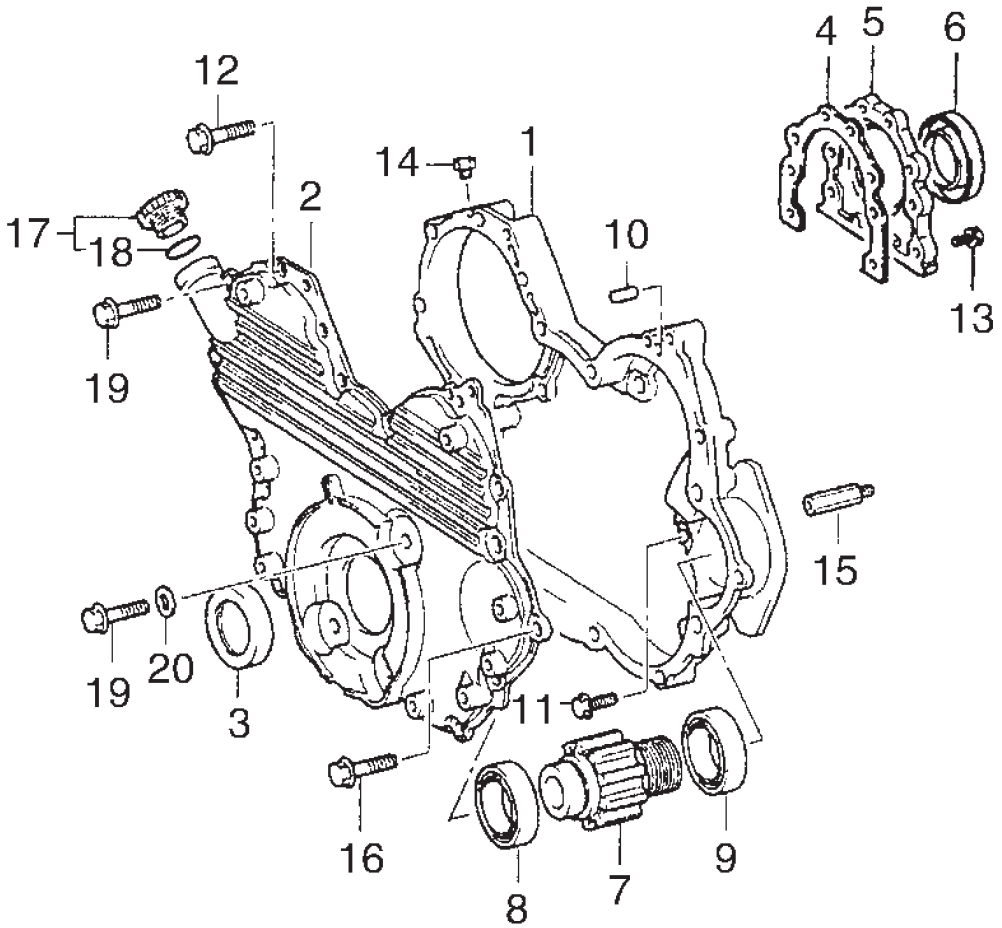

Fig. 1106-136

KEY	PART NUMBER	QTY	DESCRIPTION	SERIAL NUMBER
1	11311-78207-71	1	Timing Gear Case	-
2	11321-78209-71	1	Timing Gear Cover	-
3	9001A-31009	1	Oil Seal (former # 90311-45950-71)	-
4	11838-UC010	1	Gasket, Rear Oil Seal Retainer	-
5	11381-UC010	1	Rear Oil Seal Retainer (former # 11381-78201-71)	-
6	9001A-31008	1	Rear Main Seal (former # 90311-95951-71)	-
	00-05408	**	Wear Sleeve (Repair Type)	-
7	13519-78203-71	1	Pump Drive Gear	-
8	87103-76004-71	1	Bearing, Pump Drive Gear, No. 1 (former # 97103-06006)	-
9	9001A-3C003	1	Bearing, Pump Drive Gear, No. 2	-
10	90250-08120	3	Pin	-
11	91511-60820	5	Bolt	-
12	90105-08951-71	8	Bolt	-
13	91511-60820	6	Bolt	-
14	90345-52950-71	1	Plug, With Head Taper Screw	-
15	90109-08950-71	1	Bolt	-
16	91511-60835	1	Bolt	-
17	12180-76010-71	1	Oil Fill Cap (former # 12180-38010)	-
18	90430-37001-71	1	Gasket (former # 90430-37140)	-
19	81551-76025-71	7	Bolt M8 x 1.25 x 25 mm	-
20	90210-07006	1	Sealing Washer	-

** As Required

Camshaft & Valve Train

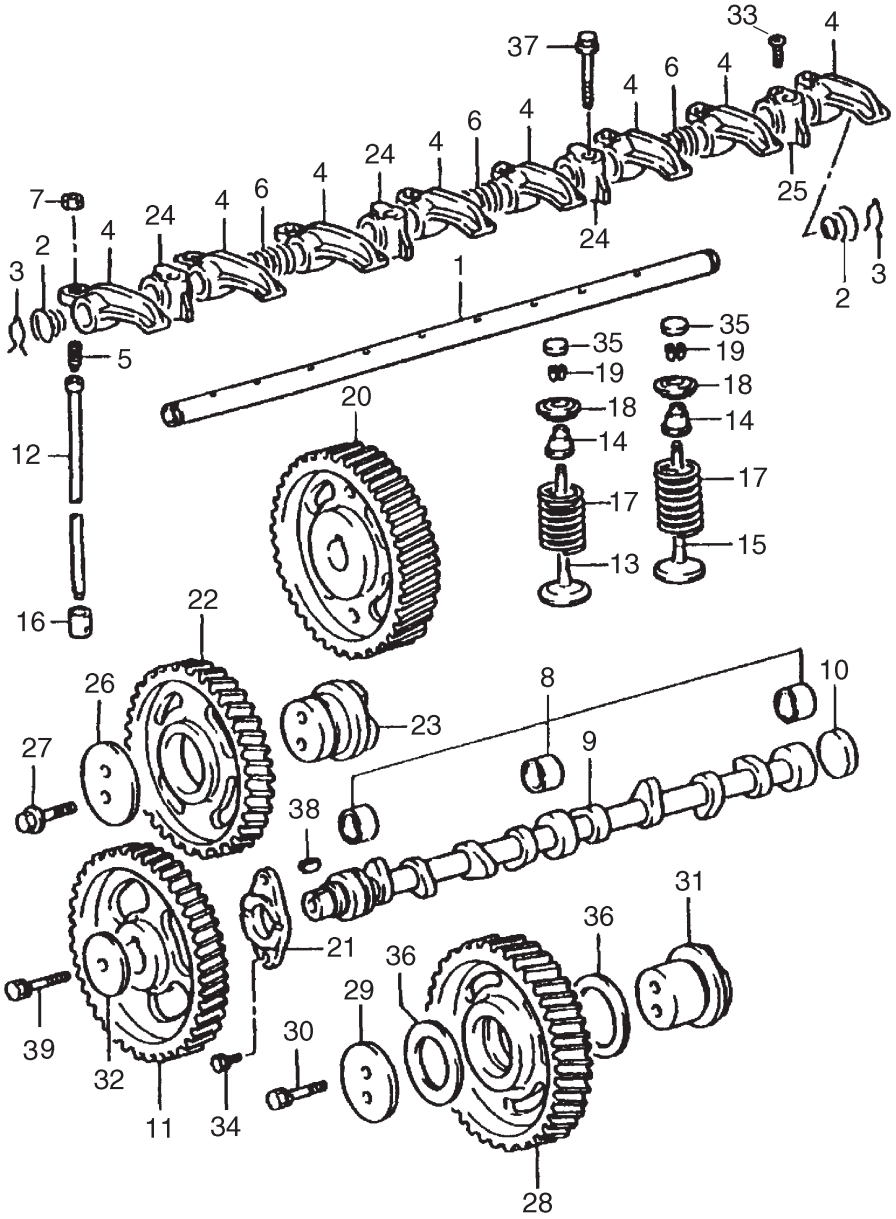

Fig. 1302

Camshaft & Valve Train

KEY	PART NUMBER	QTY	DESCRIPTION	SERIAL NUMBER
1	13901-UC010	1	Shaft (former # 13901-78200-71)	-
2	90502-16004	2	Spring	-
3	90524-15008	2	Spring (Retainer for Valve Rocker Shaft)	-
4	13811-UC010	8	Valve Rocker Arm, No. 1	-
5	80913-76067-71	8	Valve Adjusting Screw (former # 90913-05020)	-
6	90501-16163	3	Spring	-
7	80170-76005-71	8	Nut (former # 90170-08094)	-
8	11802-78202-71	1	Camshaft Bearing Set, Standard (former # 11802-78201-71)	-
	11803-78201-71	1	Camshaft Bearing Set, 0.125 mm	-
	11804-78201-71	1	Camshaft Bearing Set, 0.25 mm	-
9	13511-78201-71	1	Camshaft	-
10	80331-76033-71	1	Plug	-
11	13523-78202-71	1	Camshaft Timing Gear	-
12	13781-UC010	8	Push Rod (former # 13781-78200-71)	-
13	13711-UC010	4	Intake Valve (former # 13711-78200-71)	-
14	80913-76036-71	8	Seal (former # 90913-02053)	-
15	13715-UC010	4	Exhaust Valve (former # 13715-78200-71)	-
16	13751-UD010	8	Valve Lifter (former # 13751-78700-71)	-
17	9001A-50005	8	Valve Spring (former # 90501-40950-71)	-
18	13741-76005-71	8	Valve Spring Retainer (Former #13471-76005-71)	-
19	9001A-93001	16	Valve Lock (former # 90913-03950-71)	-
20	13613-78205-71	1	Injection Pump Drive Gear	-
21	13571-78200-71	1	Camshaft Thrust Plate	-
22	13525-78202-71	1	#1 Idler Gear	-
23	13581-78200-71	1	Idler Gear Shaft	-
24	13951-UC010	3	#1 Rocker Support (former # 13951-78200-71)	-
25	13952-UC010	1	#2 Rocker Support (former # 13952-78200-71)	-
26	13572-48010	1	Idler Gear Thrust Plate (Former #13571-76001-71)	-
27	90105-10327	2	Bolt	-
28	13509-78202-71	1	#2 Idler Gear Sub-Assembly	-
29	13573-78301-71	1	#2 Idler Gear Thrust Plate	-
30	90105-10950-71	2	Hexagon Bolt	-
31	13582-78200-71	1	#2 Idler Gear Shaft	-
32	90201-12006	1	Washer	-
33	90151-40010	1	Screw	-
34	91511-60816	2	Bolt	-
35	13716-UC010	8	Cap, Valve Stem (former # 13716-78200-71)	-
36	9001A-20603	2	Thrust Washer	-
37	91552-UA60-71	4	Capscrew, Hex Head Flanged M10 x 1.25 x 60 mm (former # 91512-61060 & 91552-811060)	-
38	85161-76001-71	1	Key (former # 95161-10519)	-
39	91619-61250	1	Bolt with Washer	-

Cylinder Head & Valve Cover

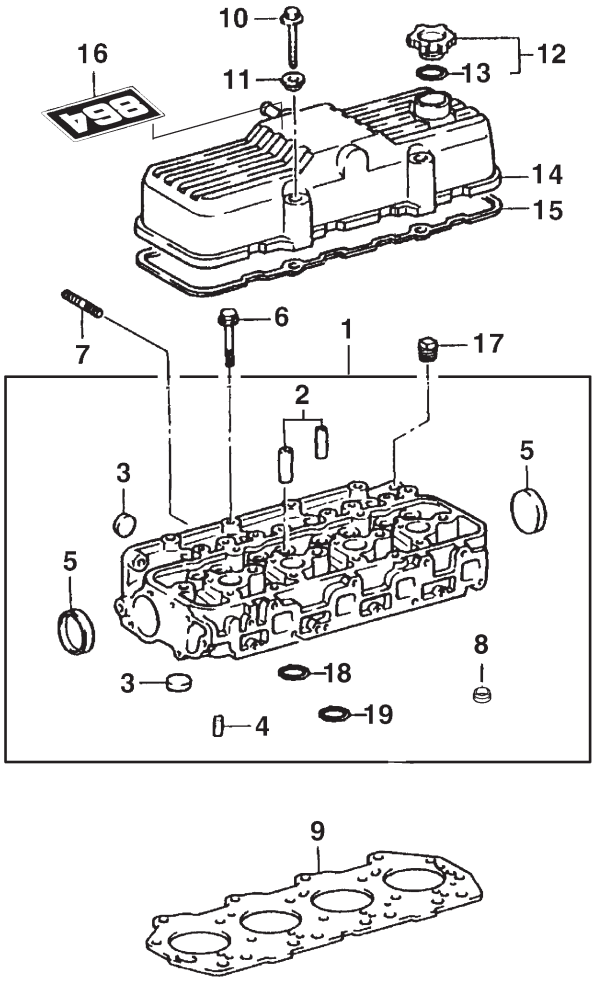

Fig 1104

KEY	PART NUMBER	QTY	DESCRIPTION	ENGINE BLOCK S/N
1	11101-UC020	1	Cylinder Head (includes keys #2- 5 & 8)	-
2	11126-64010	8	Intake Valve Guide (Standard)	-
	11127-64010	8	Intake Valve Guide Intake (O/S 0.05)	
3	86411-76004-71	11	Expansion Plug 25 mm (former # 96411-42500)	-
4	80440-76001-71	4	Tube (former # 90440-15141)	-
5	86411-76008-71	2	Expansion Plug 50 mm (former # 96411-45000)	-
6	9001A-10008	18	Bolt M11 x 1.25 x 205 mm (former # 90105-11950-71)	-
7	90116-08131	2	Stud	-
8	11106-78201-71	4	Precombustion Chamber Insert	-
9	11115-UC020	1	Gasket (former # 11115-78204-71)	-
10	81621-76011-71	4	Bolt with washer (former # 91621-60865)	-
11	80210-76007-71	4	Washer (former # 90210-08007)	-
12	12180-76010-71	1	Oil Fill Cap (former # 12180-13030)	-
13	80430-76037-71	1	Gasket (former # 90430-37140)	-
14	11201-78202-71	1	Rocker Arm Cover	-
15	11213-UC010	1	Gasket (former # 11213-78200-71)	-
16	00-08711	1	Label "864"	-
17	80345-76003-71	1	Plug (former # 90345-54005)	-
18	11131-64010	4	Valve Seat - Intake	-
19	11135-78200-71	4	Valve Seat - Exhaust	-

Oil Drain

Up to S/N xxxx47987C

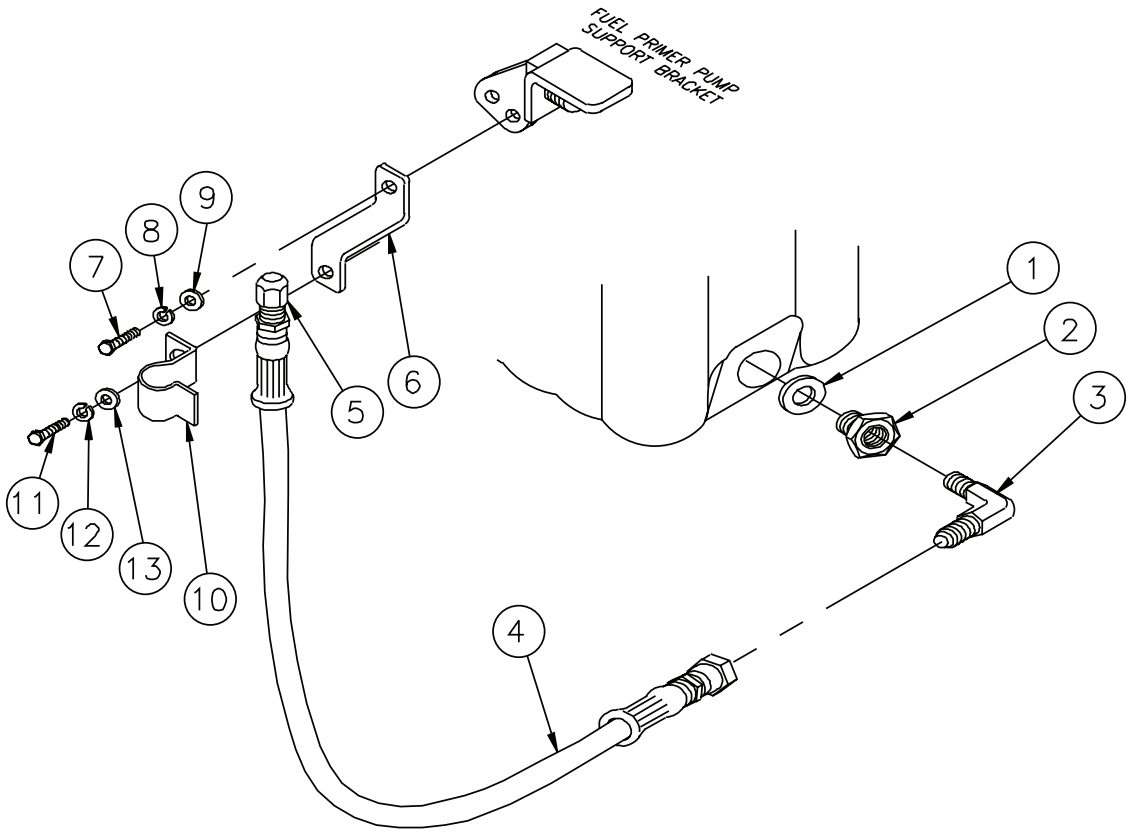

A-9502 / B-7340

KEY	PART NUMBER	QTY	DESCRIPTION	SERIAL NUMBER
1	90430-25001-71	1	Gasket	-
2	36-75402	1	F. Adapter, Steel, 3/8 NPT x M25 x 1.5	-
3	21-62508	1	M. Elbow, 90^0, Steel, 3/8 NPT X 1/2-37T	-
4	18-75400	1	Hose Assembly, 1/2" ID x 18-1/2"	-
5	21-00003	1	Cap, Hex Head, Brass 1/2 NPT	-
6	23-09502	1	Bracket	-
7	12-00712	1	Capscrew, Hex Head M8 x 1.25 x 25 mm	-
8	15-00702	1	Lock Washer, M8	-
9	15-00701	1	Flat Washer	-
10	23-78601	1	Oil Drain Hose Support Bracket	-
11	12-00776	1	Capscrew, Hex Head M8 x 1.25 x 20 mm S/S	-
12	15-00705	1	Lock Washer, M8 S/S	-
13	15-00706	1	Flat Washer, M8 S/S	-

Oil Drain with Valve

From S/N xxxx47988C

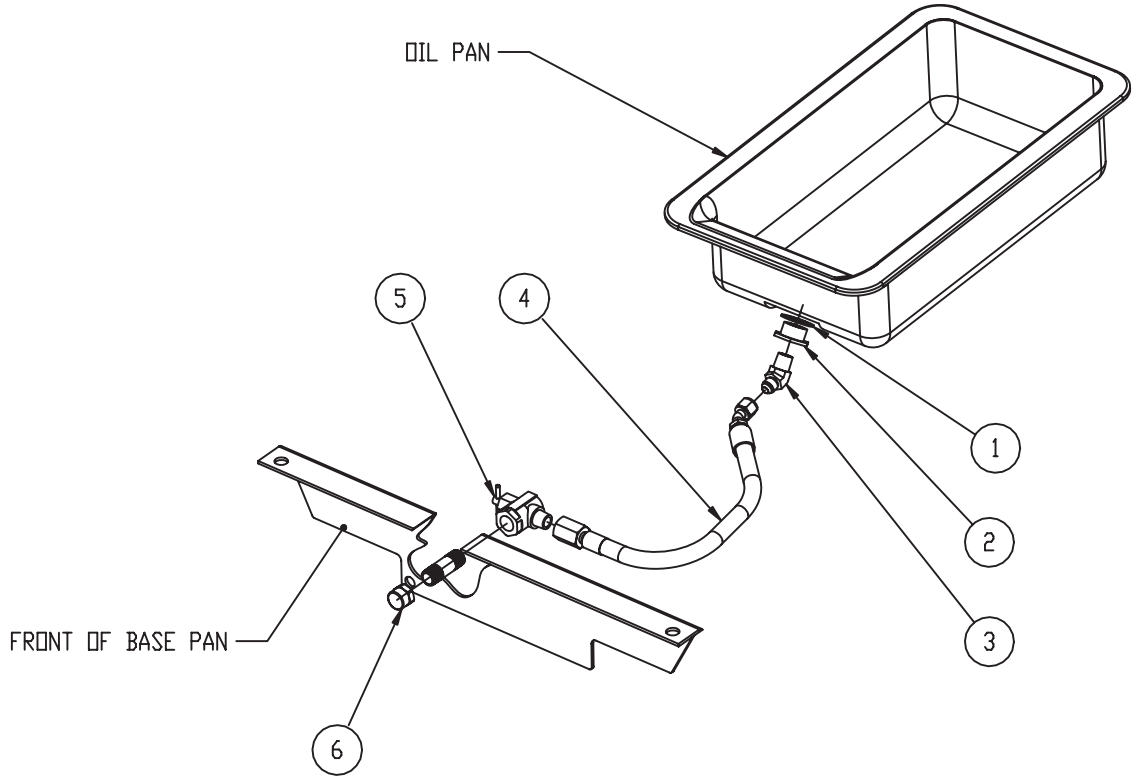

B-10120

KEY	PART NUMBER	QTY	DESCRIPTION	SERIAL NUMBER
1	90430-25001-71	1	Gasket	-
2	36-75402	1	Adapter, Steel, 3/8 NPT x M25 x 1.5	-
3	21-00605	1	Elbow, 45^0, Steel, 3/8 NPT X 3/8-37T	-
4	18-78702	1	Hose Assembly, 3/8" ID x 15-1/2"	-
5	36-71201	1	Shut-Off Ball Valve, Brass 3/8NPT Male x Female 90^0 flow	-
6	21-78004	1	Cap, Hex Head, 3/8NPT	-

Notes

Intake Manifold & Air Filter

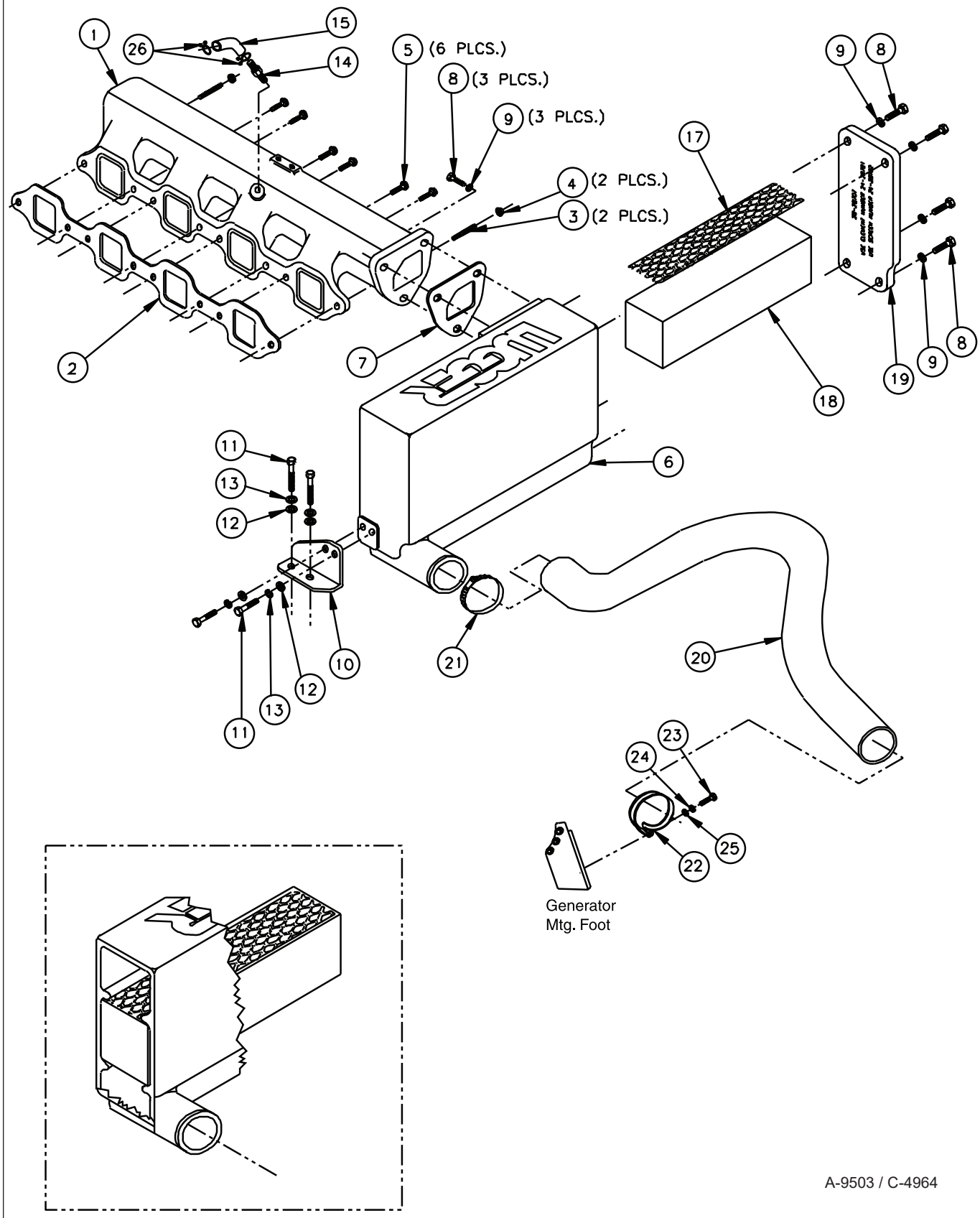

Intake Manifold & Air Filter

KEY	PART NUMBER	QTY	DESCRIPTION	SERIAL NUMBER
1	10-28701	1	Intake Manifold	-
2	17171-UC010	1	Gasket	-
3	90116-08131	2	Stud	-
4	80179-76003-71	2	Nut	-
5	81551-76025-1	6	Capscrew, Hex Head Flanged M8 x 1.25 x 25 mm	-
6	10-28702	1	Air Filter Housing	-
7	11-28701	1	Gasket	-
8	12-00712	7	Capscrew, Hex Head M8 x 1.25 x 25 mm	-
9	15-00707	7	Wave Washer M8	-
10	23-28701	1	Bracket, Air Filter Housing Support	-
11	12-00711	4	Capscrew, Hex Head M8 x 1.25 x 20 mm	-
12	15-00701	4	Flat Washer	-
13	15-00702	4	Lock Washer	-
14	21-26802	1	Male Connector, Brass, 1/4 NPT x 3/8 HB	-
15	41-01020	5	Hose, 3/8" ID Push-On	-
17	24-28702	1	Screen	-
18	24-28701	1	Air Filter Element	-
19	28-28701	1	Plate, Intake Cover	-
20	18-28701	1	Hose, Air Inlet	-
21	19-00028	1	Hose Clamp #28	-
22	19-70034	1	Cushion Clamp #34	-
23	12-00029	1	Capscrew, Hex Head M6 x 1.0 x 10 mm S/S	-
24	15-00610	1	Lock Washer M6 S/S	-
25	15-01134	1	Flat Washer M6 S/S	-
26	90467-15120	2	Clamp	-

Exhaust Manifold

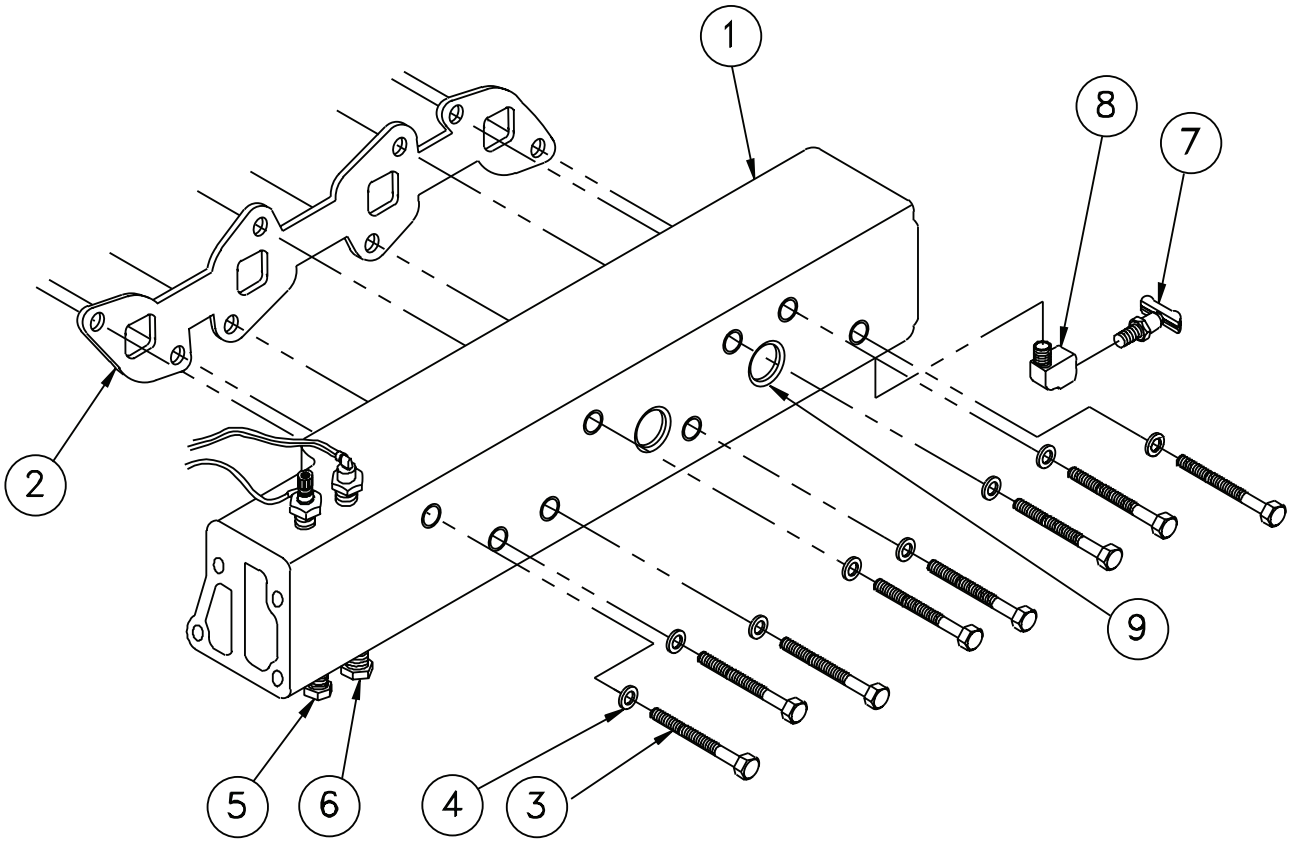

A-9505 / B-7227

KEY	PART NUMBER	QTY	DESCRIPTION	SERIAL NUMBER
1	10-38701	1	Exhaust Manifold (includes key #9)	-
2	17173-UC010	1	Exhaust Manifold Gasket	-
3	12-09800	8	Capscrew, Hex Head M10 x 1.25 x 100 mm S/S	-
4	15-09805	8	Flat Washer M10 S/S	-
5	21-31003	**	Plug, Hex Head Brass 3/8 NPT	-
6	21-00530	**	Plug, Hex Head Brass 1/2 NPT	-
7	21-10002	1	Drain Cock 1/4 NPT	-
8	21-51098	1	Street Elbow 90^0 Brass 1/4 NPT	-
9	17-10002	5	Expansion Plug	-

**As required

Wet Exhaust Elbow

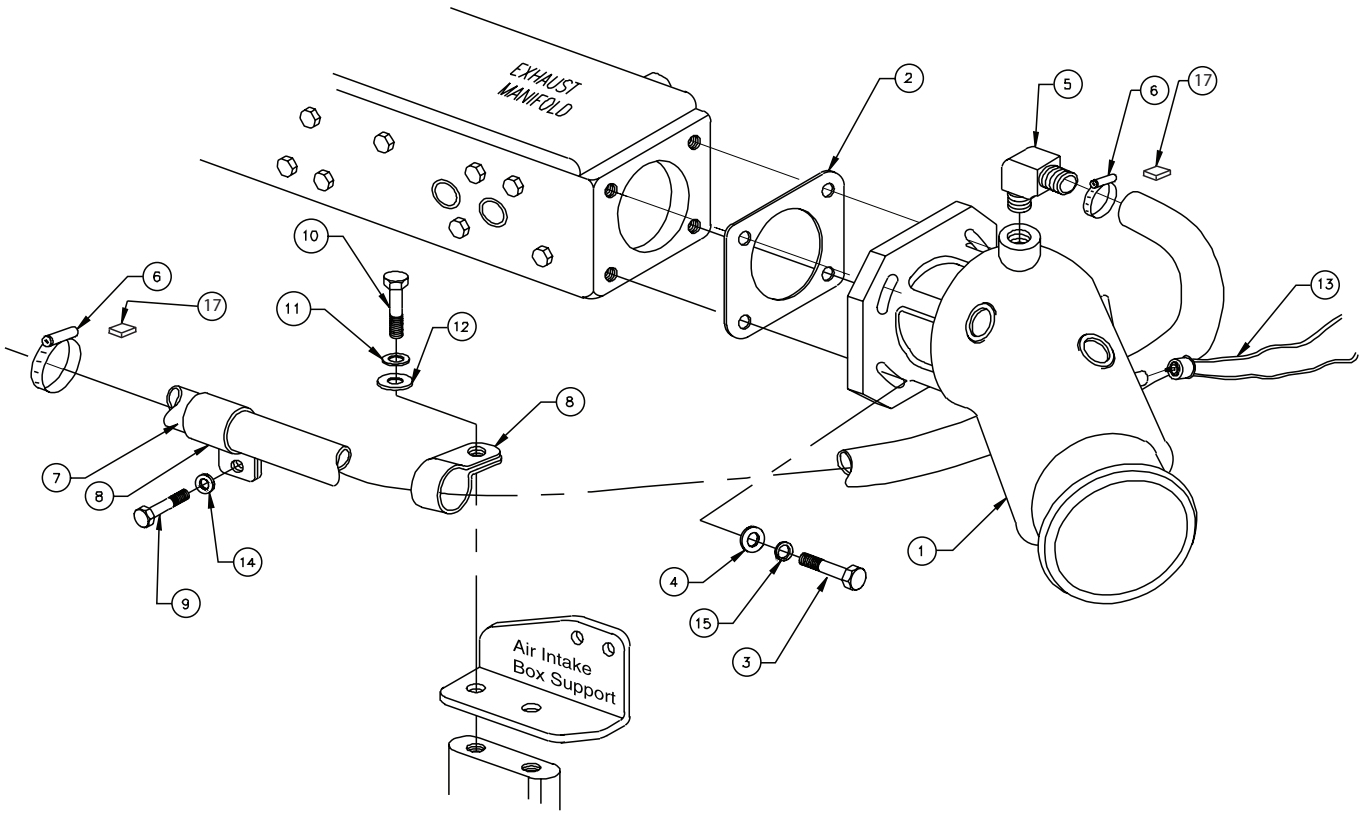

A-9506 / B-7344

KEY	PART NUMBER	QTY	DESCRIPTION	SERIAL NUMBER
1	27-35413	1	Exhaust Elbow (Cast Iron)	-
	27-35413	1	Exhaust Elbow S/S	
2	11-35401	1	Gasket	-
3	12-09753	4	Capscrew, Hex Head M8 x 1.25 x 30 mm S/S	-
4	15-00706	4	Flat Washer, M8 S/S	-
5	21-31902	1	Male Elbow 90°, 1/2 NPT x 3/4 Hose Barb	-
6	19-04012	2	Hose Clamp, Embossed Band #12	-
7	18-11204	1	Hose, 3/4" ID x 43" Wire Reinforced	-
8	19-71030	2	Adelle Clamp	-
9	12-00821	1	Capscrew, Hex Head M10 x 1.25 x 20 mm S/S	-
10	12-00776	1	Capscrew, Hex Head M8 x 1.25 x 20 mm S/S	-
11	15-00705	1	Lock Washer M8 S/S	-
12	15-70004	1	Flat Washer S/S	-
13	22-42014	1	Switch, High Exhaust Temperature 205˚F	up to xxxx-32320
	22-42070	1	Switch, High Exhaust Temperature 205°F	from xxxx-32321
14	15-09805	1	Flat Washer M10 S/S	-
15	15-00705	4	Lock Washer M8 S/S	-
16	22-40482	1	Harness, High Exhaust Temperature Connection (not shown)	from xxxx-32321
17	00-00045	2	Hose Clamp Tang Jacket	-

Dry Exhaust

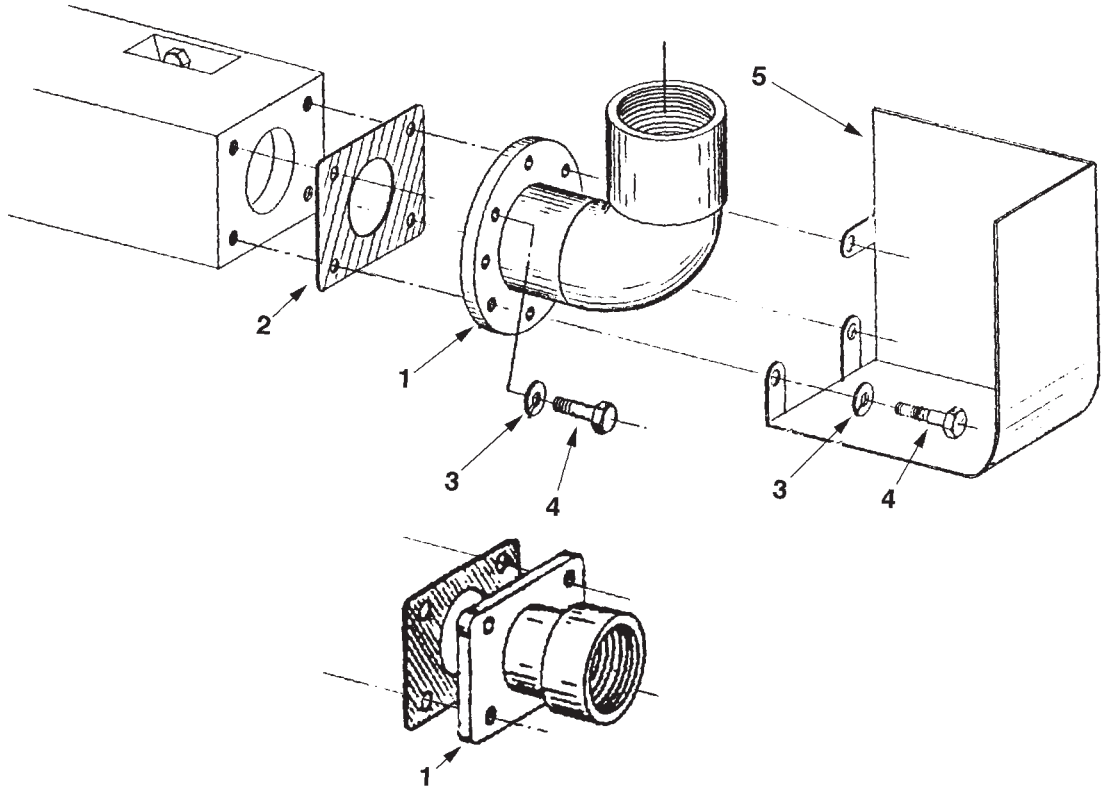

A-4267 / B-3632A

KEY	PART NUMBER	QTY	DESCRIPTION	SERIAL NUMBER
1	27-35405	1	Dry Exhaust Elbow, 2" NPT Female	-
	31-35401	1	Dry Exhaust Adapter 2" NPT Female	-
2	11-35401	1	Exhaust Elbow Gasket	-
3	15-00702	4	Lock Washer, Helical M8	-
4	12-00711	4	Capscrew, Hex Head M8 x 1.25 x 20 mm	-
5	00-35409	1	Heat Shield	-

Expansion Tank & Thermostat Housing

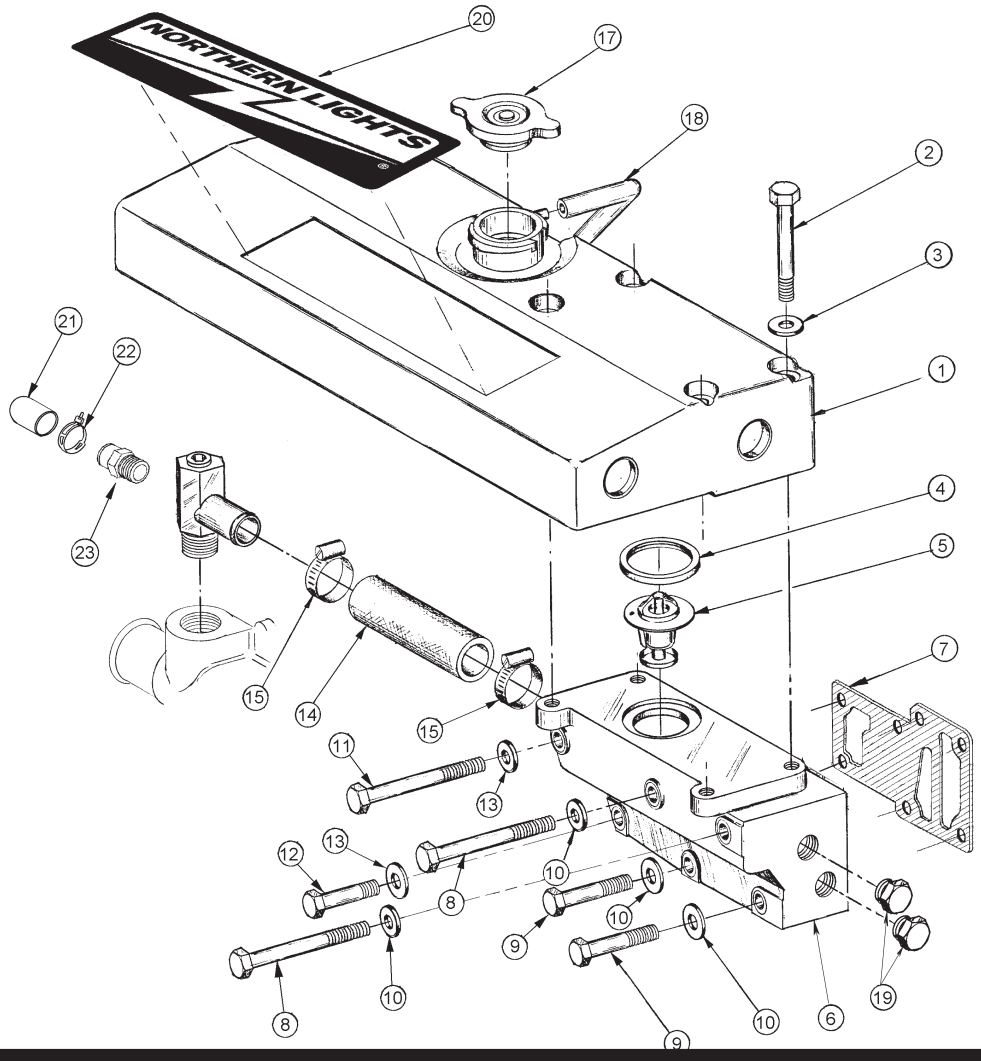

A-9507 / C-4881

KEY	PART NUMBER	QTY	DESCRIPTION	SERIAL NUMBER
1	10-12205	1	Expansion Tank	-
2	12-09819	4	Capscrew, Hex Head M10 x 1.5 x 75 mm S/S	-
3	15-09805	4	Flat Washer, M10	-
4	11-10015	1	Thermostat Seal Ring	-
5	35-11000	1	Thermostat 180^{0}F/ 82^{0}C	-
6	10-18701	1	Thermostat Housing	-
7	11-18701	1	Gasket, Thermostat Housing	-
8	12-09826	2	Capscrew, Hex Head M10 x 1.5 x 105 mm S/S	-
9	12-09050	2	Capscrew, Hex Head M10 x 1.5 x 85 mm S/S	-
10	15-09805	4	Flat Washer, M10 S/S	-
11	12-09047	1	Capscrew, Hex Head M8 x 1.25 x 100 mm S/S	-
12	12-09750	2	Capscrew, Hex Head M8 x 1.25 x 80 mm S/S	-
13	15-00706	3	Flat Washer M8 S/S	-
14	18-18701	1	Hose, 1" ID x 6", 3 Ply Silicone	-
15	19-01016	2	Hose Clamp #16 Extended Band S/S	-
17	21-12013	1	Filler Cap	-
18	18-00130	1	Hose, 5/16" ID X 30" Polyvinyl	-
19	21-00530	2	Hex Head Plug, Brass 1/2 NPT	-
20	00-00006	1	Nameplate, "Northern Lights"	-
21	21-18601	1	Cap	-
22	19-18601	1	Clamp	-

Heat Exchanger & Mounting

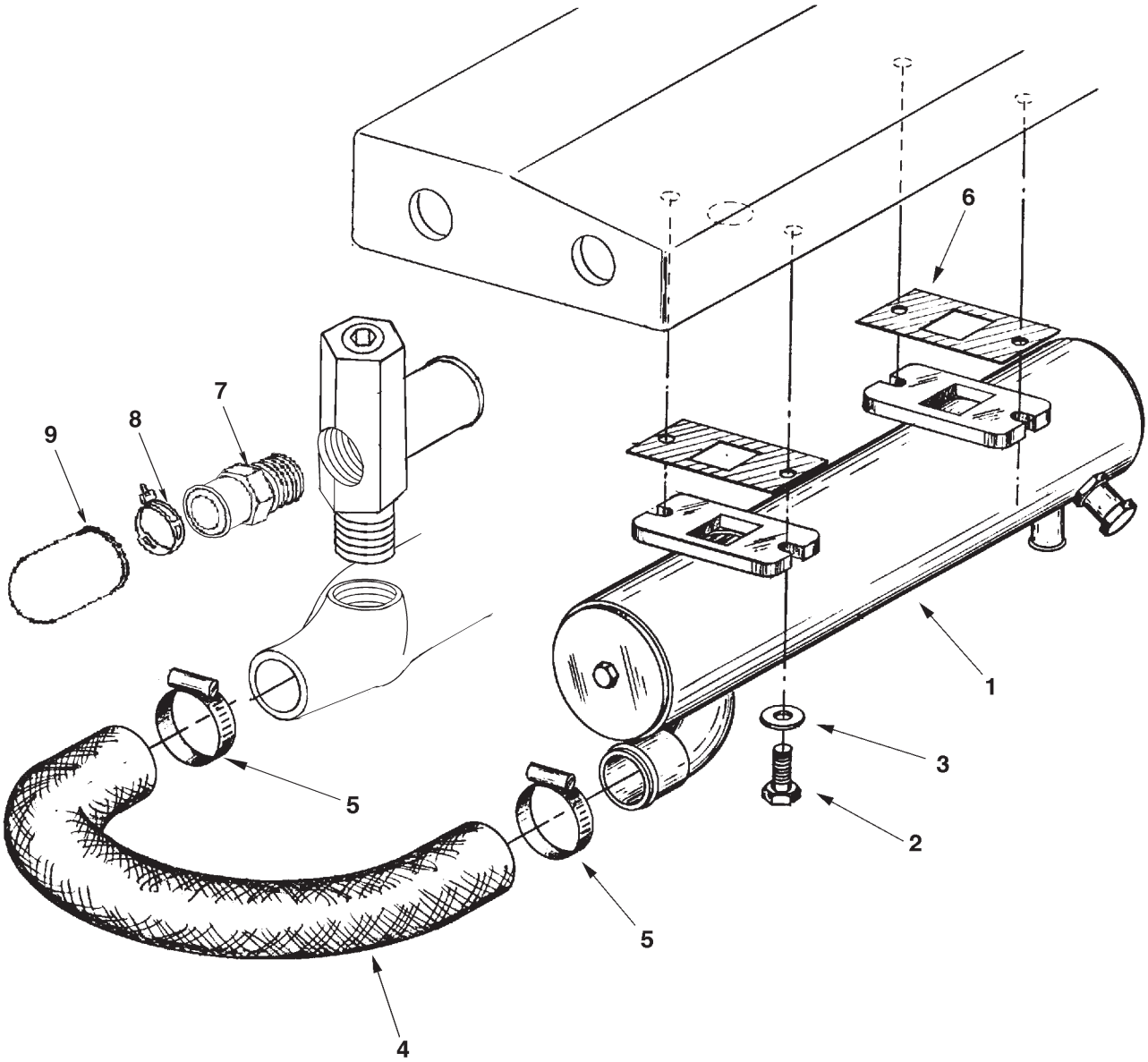

A-4221A / C-2341z

KEY	PART NUMBER	QTY	DESCRIPTION	SERIAL NUMBER
1	20-15420	1	Heat Exchanger Assembly (see parts detail)	-
2	12-09212	4	Capscrew, Hex Head 5/16 - 18 x 1" S/S	-
3	15-11000	4	Flat Washer, 5/16" S/S	-
4	18-15402	1	Hose	-
5	19-00024	2	Hose Clamp #24	-
6	11-12203	2	Gasket	-
7	21-12014	1	Male Connector 3/8 NPT x 1/2” Hose Barb	-
8	19-18601	1	Clamp	-
9	21-18601	1	Cap	-
10	21-12012	1	Plug 1/2 BSPT	-

Heat Exchanger Assembly

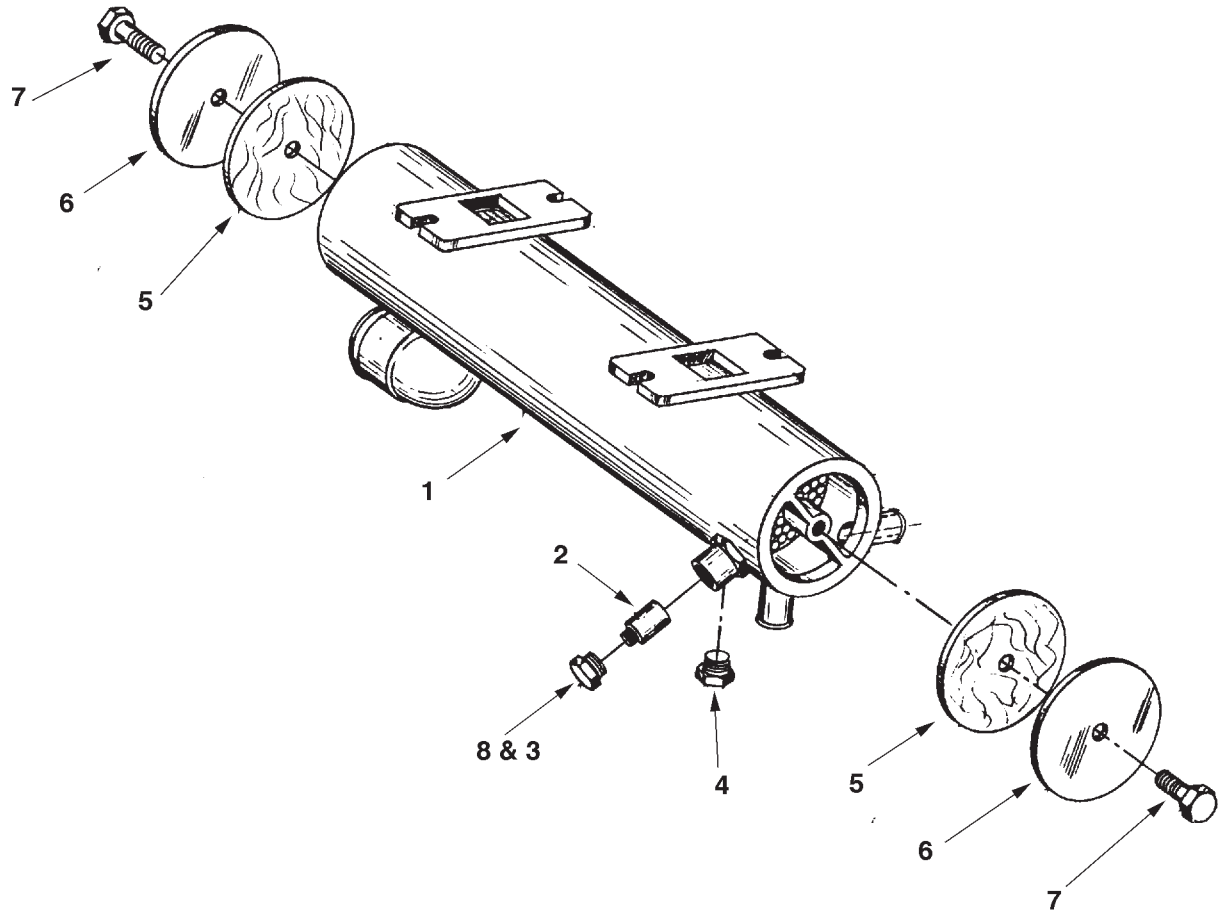

A-4219 / C-2339

KEY	PART NUMBER	QTY	DESCRIPTION	SERIAL NUMBER
••	20-15420W	1	Heat Exchanger Assembly (includes all keys)	-
1	20-15420	1	Heat Exchanger	-
2	21-12010	1	Zinc Electrode	-
3	21-12000	1	Brass Plug, 1/4 NPT x 5/16-18	-
4	21-31624	1	Brass Plug, 1/4 NPT	-
5	20-12012	2	Heat Exchanger Gasket, 3"	-
6	28-12201	2	Heat Exchanger End Plates, 3"	-
7	12-11002	2	Capscrew, Hex Head Stainless Steel 3/8-16 x 3/4"	-
8	00-11003	1	Label “Zinc”	-

Coolant Pump

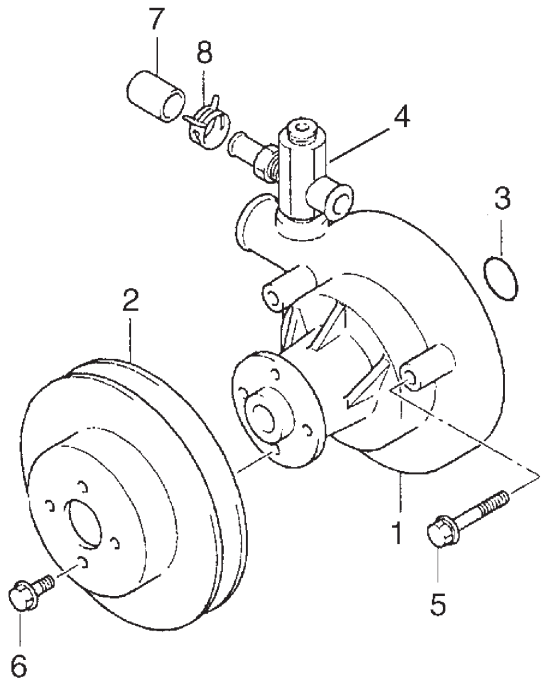

1601-109

KEY	PART NUMBER	QTY	DESCRIPTION	SERIAL NUMBER
1	16100-UC030	1	Coolant Pump Assembly (formerly #16100-78201-71 & 16100-78204-71)	-
2	16371-78205-71	1	Pulley	-
3	9001A-30001	1	O-ring (former # 90301-35950-71)	-
4	21-15402	1	Elbow Fitting with 3/8 BSPT Heater Outlet	-
5	80119-76033-71	3	Bolt with Washer	-
6	01435-00816	4	Capscrew, Hex Head Flanged M8 x 1.25 x 16 mm	-
7	21-18601	1	Cap	-
8	19-18601	1	Clip	-

Keel Cooling Outlet

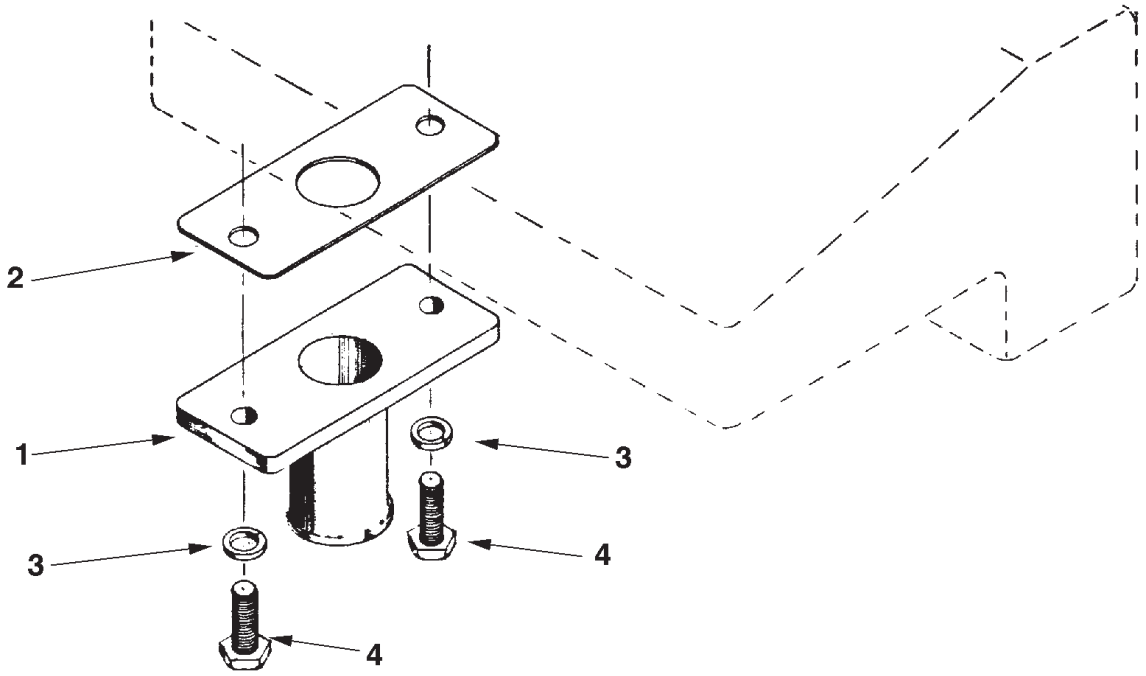

A-4400 / B-1700

KEY	PART NUMBER	QTY	DESCRIPTION	SERIAL NUMBER
1	31-15402	1	Keel Cooling Adapter	-
2	11-12203	1	Gasket	-
3	15-00222	2	Lock Washer, 5/16" USS S/S	-
4	12-09212	2	Capscrew, 5/16 - 18 x 1" S/S	-

Raw Water Pump & Mounting

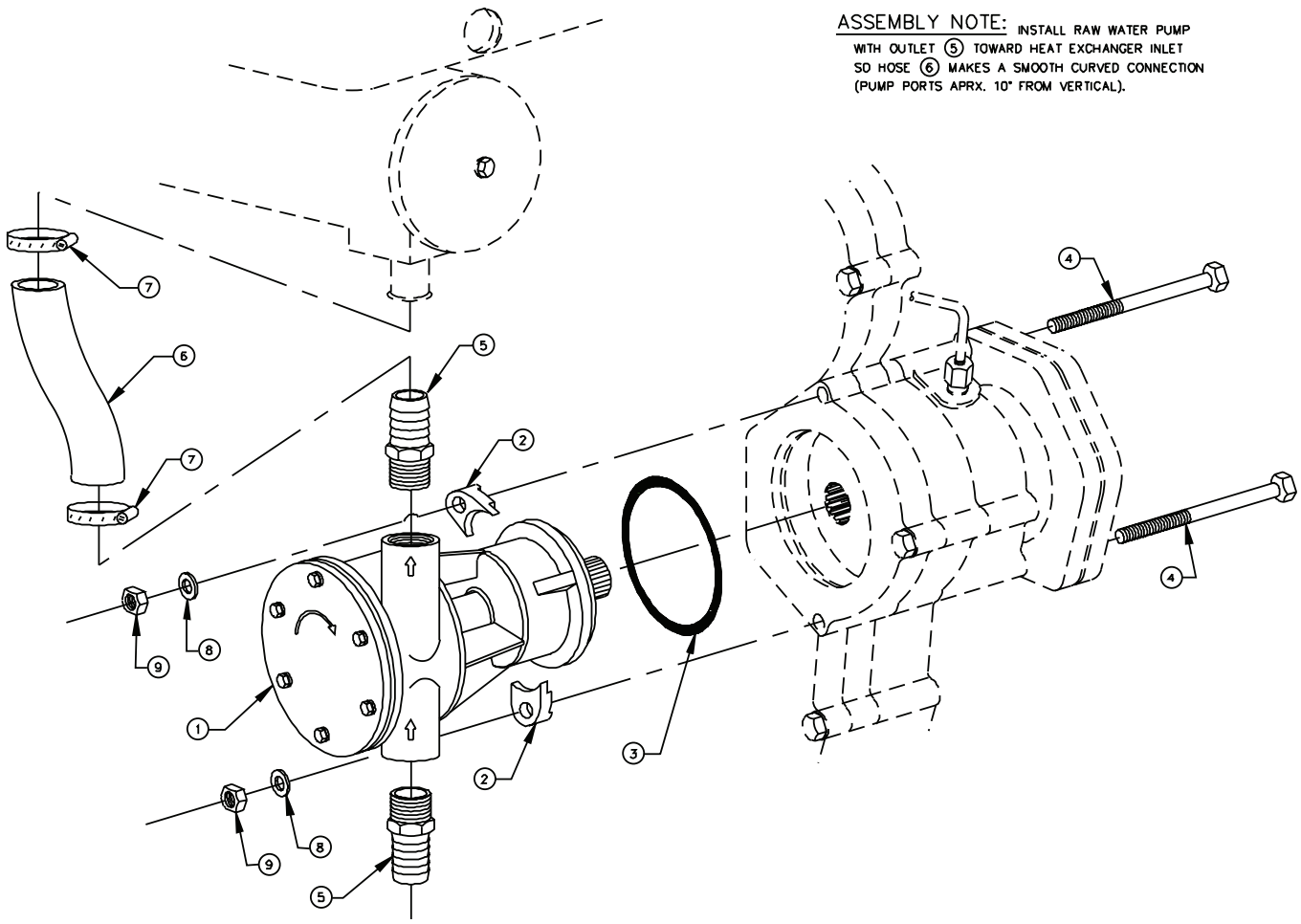

A-9509 / C-5058

KEY	PART NUMBER	QTY	DESCRIPTION	SERIAL NUMBER
1	25-15405	1	Raw Water Pump (see parts detail)	-
2	00-15401	2	Mounting Clip	-
3	16-15401	1	O-ring	-
4	12-09829	2	Capscrew, Hex Head M10 x 1.5 x 130 mm S/S	-
5	21-00129	2	Brass Male Connection, 1/2 NPT x 3/4 HB	-
6	18-15404	1	Hose, 3/4" ID x 5-3/4”	-
7	19-00012	2	Hose Clamp #12	-
8	15-00808	2	Lock Washer M10 S/S	-
9	14-00817	2	Hex Nut M10 x 1.5 S/S	-

Raw Water Pump Detail

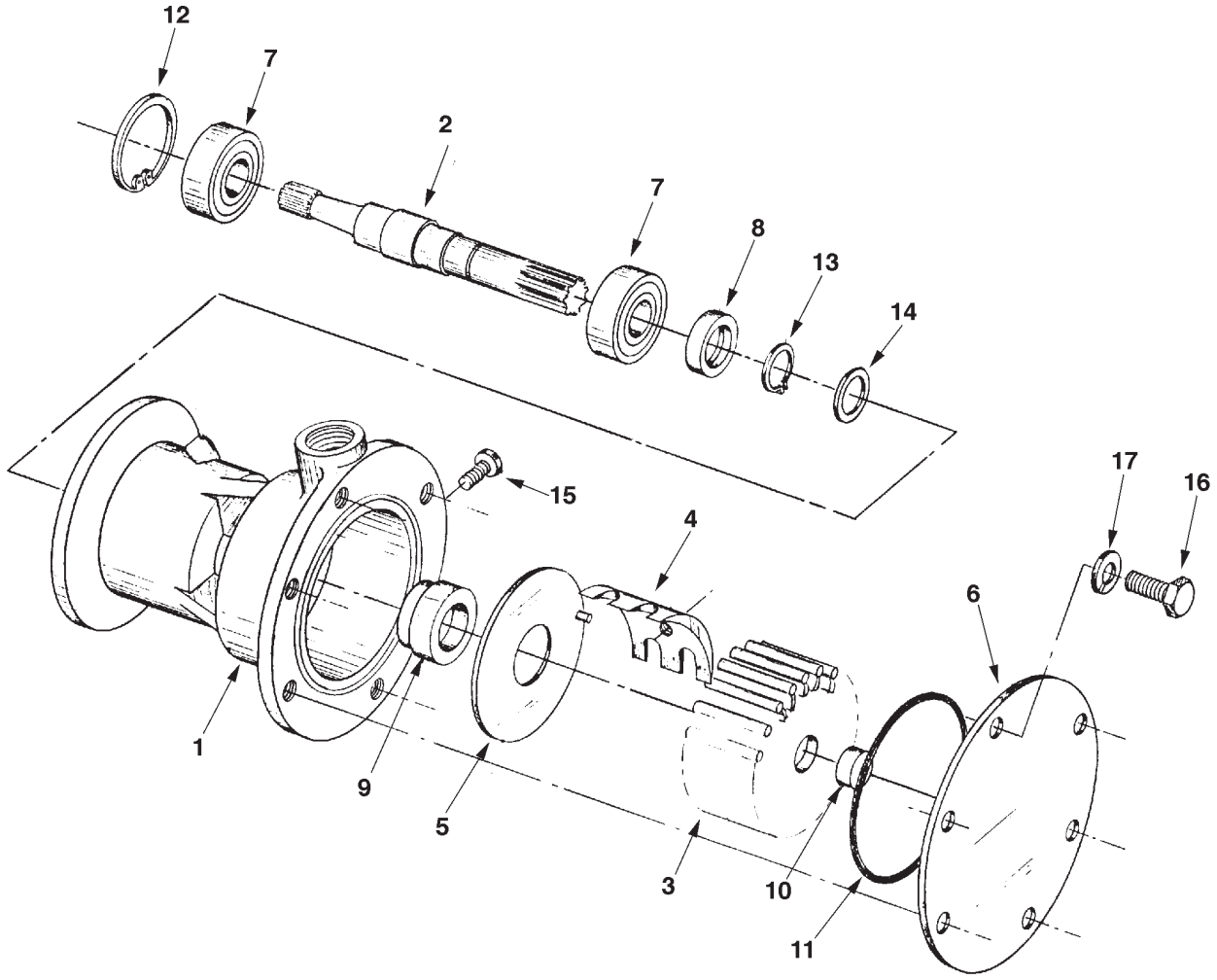

A-4761 / C-2477

KEY	PART NUMBER	QTY	DESCRIPTION	SERIAL NUMBER
••	25-15405	1	Raw Water Pump Assembly (includes all keys)	-
•	25-12004	1	Repair Kit (includes keys #3 - #9, #11)	-
1	25-15405	1	Pump Housing	-
2	25-15406	1	Shaft	-
3	25-12060	1	Impeller (includes key #11)	-
4	25-12061	1	Cam	-
5	25-12062	1	Wear Plate	-
6	25-12063	1	End Cover	-
7	25-12064	1	Bearing	-
8	25-12065	1	Lip Seal	-
9	25-12066	1	Mechanical Seal	-
10	25-12017	1	Spline Seal	-
11	25-12067	1	O-Ring	-
12	25-12068	1	Retaining Ring	-
13	25-12069	1	Retaining Ring	-
14	25-12070	1	Washer	-
15	25-12071	1	Pan Head Screw #10-32 x 3/8	-
16	25-12072	6	Hex Head Screw #10-32 x 3/8	-
17	25-12073	6	Lock Washer #10	-

Standard Fuel Injection Lines & Injection Pump

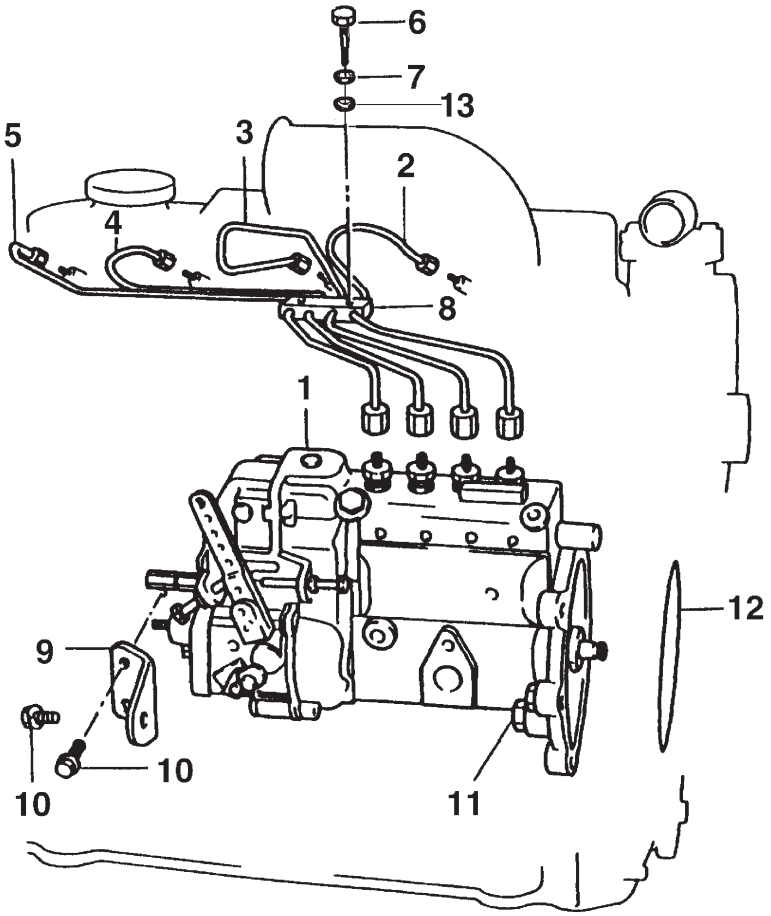

P864Injpump

KEY	PART NUMBER	QTY	DESCRIPTION	SERIAL NUMBER
1	22100-UC060	1	Injection Pump Assembly (formerly #22100-78242-71 & 22100-78243-71)	-
2	23701-UC010	1	Injection Line #1	-
3	23702-UC010	1	Injection Line #2	-
4	23703-UC010	1	Injection Line #3	-
5	23704-UC010	1	Injection Line #4	-
6	12-00031	2	Capscrew, Hex Head M6 x 1.0 x 25 mm	-
7	15-01132	2	Lock Washer M6	-
8	23741-76006-71	2	Clamp (former # 23741-64020)	-
9	22811-78201-71	1	Injection Pump Support	-
10	81621-76011-71	2	Bolt (former # 91621-60820)	-
11	81511-76025-71	1	Bolt	-
12	80301-76075-71	1	O-ring (former # 90301-99032)	-
13	15-00008	2	Flat Washer M6	-

Double Wall Fuel Lines

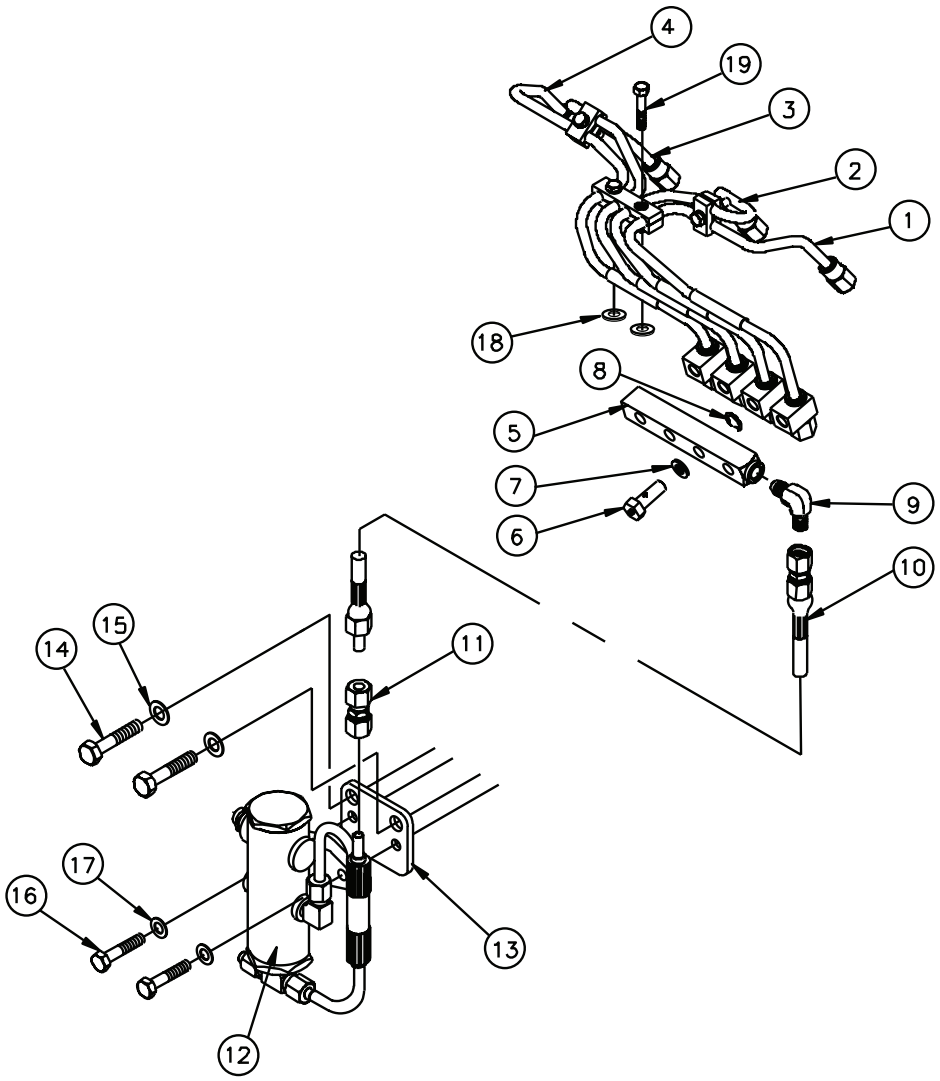

A-10059/ B-7917

KEY	PART NUMBER	QTY	DESCRIPTION	SERIAL NUMBER
1	27-58711	1	Injection Line #1 Double Wall	-
2	27-58712	1	Injection Line #2 Double Wall	-
3	27-58713	1	Injection Line #3 Double Wall	-
4	27-58714	1	Injection Line #4 Double Wall	-
5	10-58701	1	Fuel Alarm Manifold	-
6	21-55707	4	Banjo Bolt	-
7	15-55701	4	Banjo Washer	-
8	16-55701	4	O-ring	-
9	21-55404	1	Male Elbow, 90^0 Steel 1/4 BSP x 1/4-37T	-
10	18-58713	1	Hose Assembly 1/4” ID x 25”	-
11	21-55703	1	Union, Steel 8 mm	-
12	10-50002	1	Alarm Tank Assembly	-
13	23-58701	1	Bracket, Alarm Tank Mtg.	-
14	12-00942	2	Capscrew, Hex Head M12 x 1.25 x 25 mm	-
15	15-00912	2	Lock Washer, Helical M12	-
16	12-00711	2	Capscrew, Hex Head M8 x 1.25 x 20 mm	-
17	15-00707	2	Wave Washer M8	-
18	15-00708	2	Washer, Tube Clamp Support (former #21-58701)	-
19	12-00032	2	Capscrew, Hex Head M6 x 1.0 x 30 mm	-

Fuel Injectors & Return Lines

USCG A-1 - SAE J1527 - ISO 7840

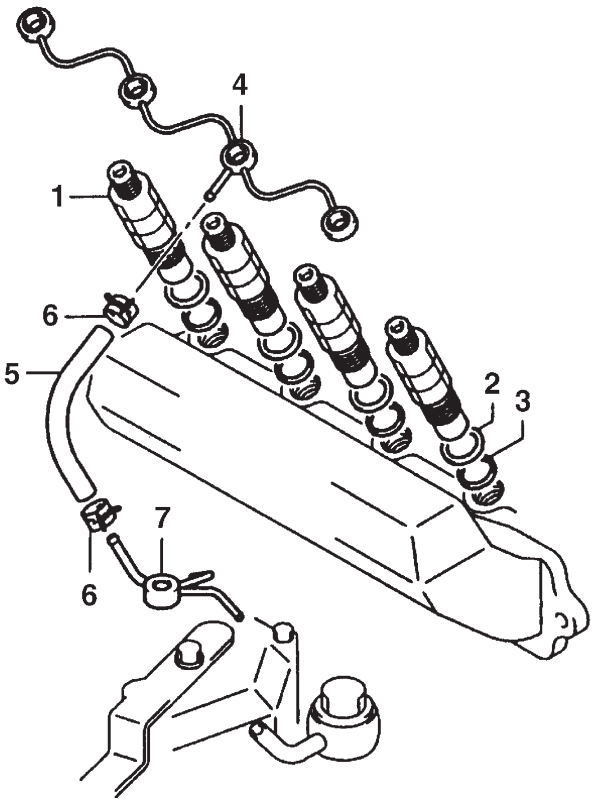

P864Injectors

KEY	PART NUMBER	QTY	DESCRIPTION	SERIAL NUMBER
1	23600-78200-71	4	Fuel Injector	-
2	11176-76006-71	4	Injection Nozzle Seat (former # 11176-64010)	-
3	11177-76007-71	4	Gasket (former # 11177-64010)	-
4	23761-UC020	1	Leak-Off Manifold with 3/16” Hose Barb Connection ** (former # 23761-78201-71)	-
5	18-58707	1	Fuel Return Hose*	-
6	19-50112	2	Hose Clamp #12 “Mini” S/S*	-
7	23762-78201-71	1	Pipe Assembly, Fuel Return*	-

*See also USCG A-1 - SAE J1527 - ISO 7840 Fuel Line Assemblies

** See USCG A-1 - SAE J1942 - ABS Fuel Line Assemblies For Leak-Off Manifold with 1/4” JIC Connection

Fuel Filter and Lines

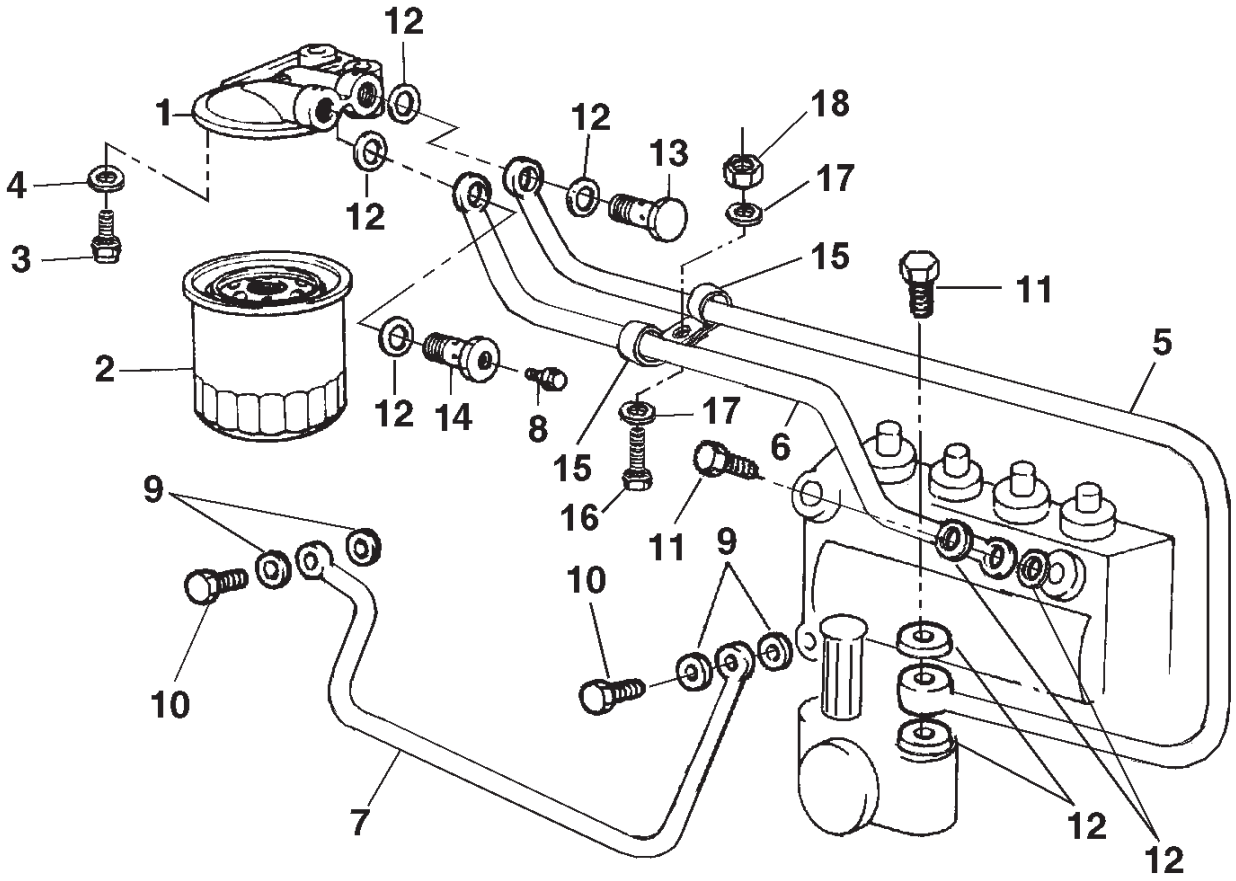

A-9654/ A-9883A

KEY	PART NUMBER	QTY	DESCRIPTION	SERIAL NUMBER
1	23300-76019-71	1	Fuel Filter Base Assembly (includes key #2) (former # 23300-56080)	-
2	24-52020	1	Fuel Filter	-
3	12-00812	2	Capscrew, Hex Head M10 x 1.5 x 40 mm	-
4	15-00804	2	Wave Washer M10	-
5	27-58702	1	Tube, Fuel Filter Inlet	-
6	27-58701	1	Tube, Fuel Filter Outlet	-
7	15707-UC010	1	Oil Supply Line (former # 15707-78201-71)	-
8	47547-76001-71	1	Vent Plug (former # 47547-12030)	-
9	90430-76002-71	4	Washer (former # 90430-10027)	-
10	86341-76001-71	2	Banjo Bolt (former # 96341-11000)	-
11	07206-11014	2	Banjo Bolt (former # 90099-18010)	-
12	07005-01412	8	Sealing Washer M14	-
13	07206-76001-71	1	Banjo Bolt (former # 90099-18010)	-
14	23319-76002-71	1	Banjo Bolt (former # 23319-48010)	-
15	19-72252	2	Adelle Clamp	-
16	12-00030	1	Capscrew, Hex Head M6 x 1.0 x 16	-
17	15-00101	2	Flat Washer	-
18	14-04803	1	Hex Nut Nylock M6 x 1.0	-

Fuel Lines

USCG A-1 & ISO 7840 Fuel Lines
up to S/N xxxx-47987C

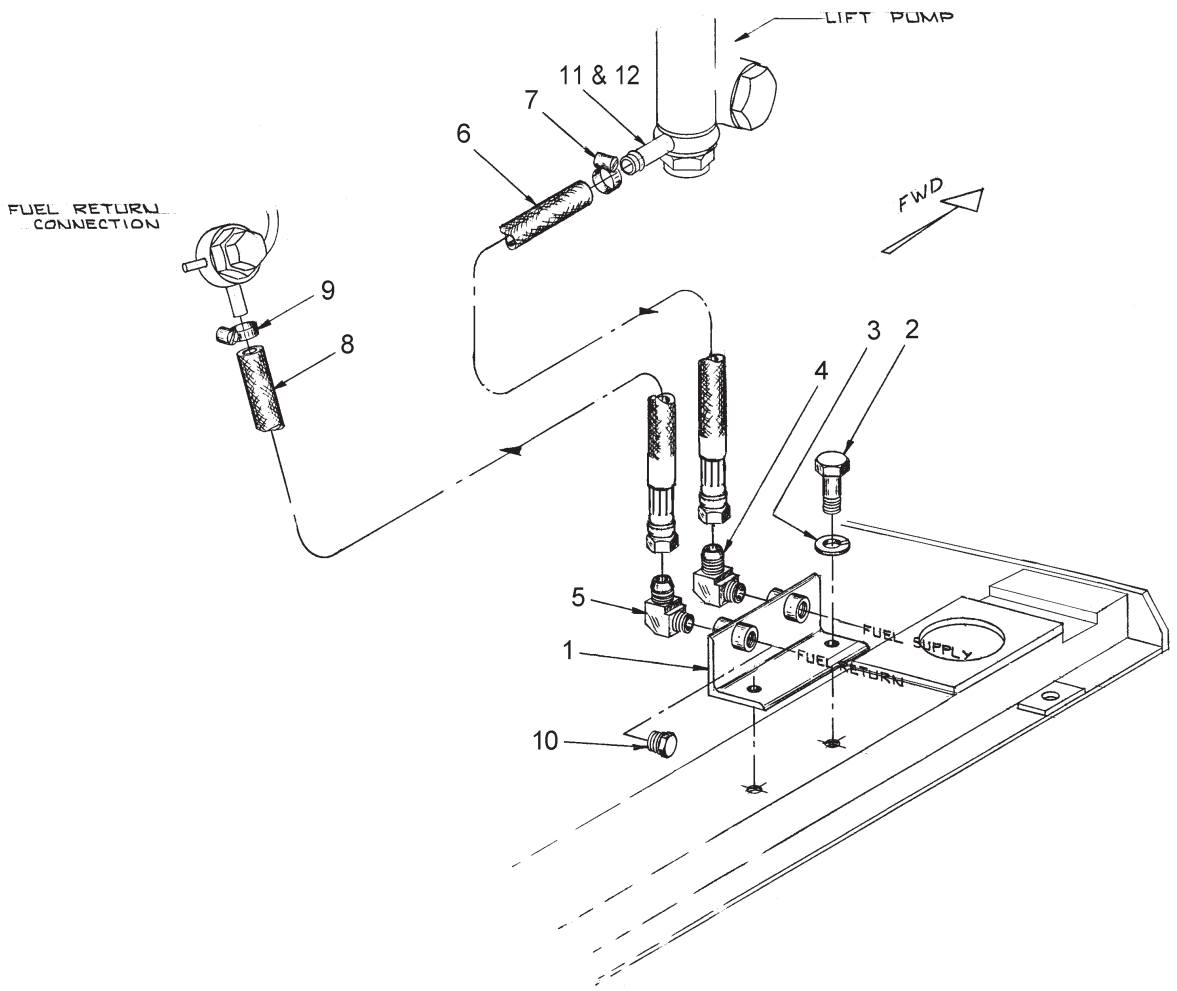

A-11856 / C-6357

KEY	PART NUMBER	QTY	DESCRIPTION	SERIAL NUMBER
1	10-51099	1	Fuel Manifold, 1/4 NPT	-
2	12-01102	2	Capscrew, Hex Head M6 x 1.0 x 16 mm S/S	-
3	15-00610	2	Lock Washer, Helical M6 S/S	-
4	21-52245	1	Male Elbow, 90^0 Brass 1/4 NPT x 5/16-45T	-
5	21-71044	1	Male Elbow, 90^0 Brass 1/4 NPT x 1/4-45T	-
6	18-58705	1	Hose Assembly 5/16” I.D. x 12-1/2”	-
7	19-50115	1	Hose Clamp #15 “Mini” S/S	-
8	18-58706	1	Hose Assembly 1/4” I.D. x 18-1/2”	-
9	19-50113	1	Hose Clamp #13 “Mini” S/S	-
10	21-31624	2	Plug (for shipping)	-
11	80405-76004-71	1	Banjo Connector M14 x 5/16” Hose Barb (former # 90405-08128)	-
12	949018-1240	2	Sealing Washer, Copper M14	-
			*Note: Hoses shown here replace the “Push-On” type hose & fittings provided on earlier models	

Fuel Lines

USCG A-1 SAE J1527 & ISO 7840 Fuel Lines
from S/N xxxx-47988C

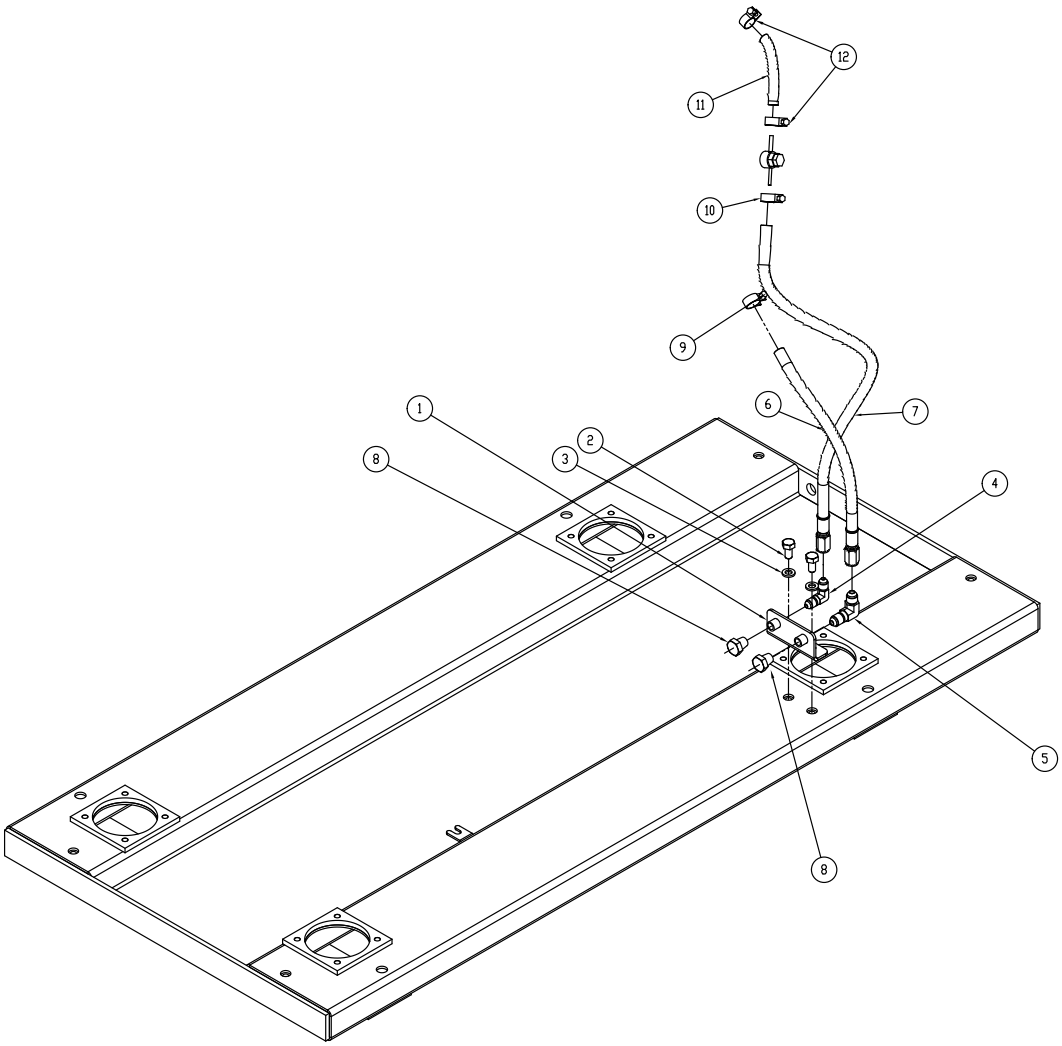

B-11907

KEY	PART NUMBER	QTY	DESCRIPTION	SERIAL NUMBER
1	10-51002	1	Manifold, fuel line connection	-
2	12-09751	2	Capscrew, HX HD M8 x 1.25 x 16 mm S/S	-
3	15-00705	2	Lock washer, Helical M8 S/S	-
4	21-71044	1	Male elbow, 90° Brass 1/4NPT x 1/4-45T	-
5	21-52245	1	Male elbow, 90° Brass 1/4NPT x 5/16-45T	-
6	18-58719	1	Hose assembly 5/16”ID x 11-1/2” FMS	-
7	18-58706	1	Hose assembly 1/4”ID x 18-1/2” 1/4 FMS	-
8	21-31624	2	Plug, HX HD Brass	-
9	19-50115	1	Hose clamp #15 Mini S/S	-
10	19-50113	1	Hose clamp #13 Mini S/S	-
11	18-58707	1	Hose 3/16” ID x 5-1/4”	-
12	19-50112	2	Hose clamp #12 Mimi S/S	-

Fuel Lines

USCG A-1 SAE J1942 ABS Fuel Lines
up to S/N xxxx-41935C

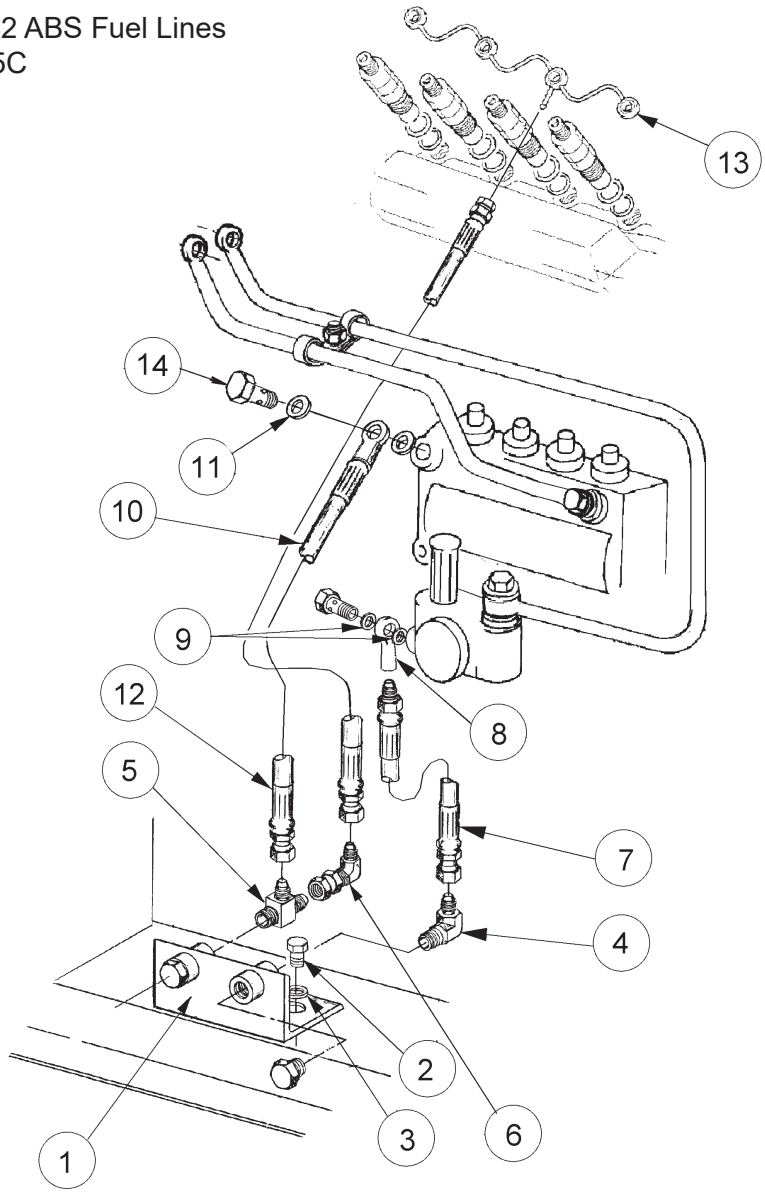

A-9941 / B-7921

KEY	PART NUMBER	QTY	DESCRIPTION	SERIAL NUMBER
1	10-51099	1	Manifold, Fuel Line Connection Manifold	-
2	12-01102	2	Capscrew, Hex Head M6 x 1.0 x 16 mm S/S	-
3	15-00610	2	Lock Washer M6 S/S	-
4	21-74411	1	Male Elbow 90^0 Steel, 1/4 NPT x 5/16-37T	-
5	21-42231	1	Male Run Tee, Steel, 1/4 NPT x 1/4-37T	-
6	21-52214	1	Elbow 90^0 Swivel, Steel 1/4-37T	-
7	18-58701	1	Hose Assembly 1/4” ID x 11-1/2” 1/4 NPT	-
8	21-52203	1	Banjo Fitting 14 mm ID x 1/4 NPT	-
9	07005-01412	2	Sealing Washer	-
10	18-58704	1	Hose Assembly 1/4” ID x 22” M12 Banjo *	-
11	07005-01212	2	Sealing Washer	-
12	18-58702	1	Hose Assembly 3/16” ID x 26” 1/4 FMS	-
13	27-58703	1	Tube Assembly, Fuel Return	-
14	22160-76002-71	1	Banjo Bolt	-
			* Includes Fitting 21-50051	

Fuel Lines

USCG A-1 SAE J1942 ABS Fuel Lines
from S/N xxxx-41936 to S/N xxxx-47987C

Drawing not available
at date of publication

KEY	PART NUMBER	QTY	DESCRIPTION	SERIAL NUMBER
1	10-51099	1	Manifold, Fuel Line Connection	-
2	12-01102	2	Capscrew, Hex Head M6 x1.0 x 16 mm S/S	-
3	15-00610	2	Lock Washer, Helical M6 S/S	-
4	21-74411	1	Male Elbow, 90^0 Steel 1/4NPT x 5/16-37T	-
5	18-58711	1	Hose Assembly 1/4”ID x 11-1/2” 1/4NPT Male Rigid x 5/16-37T	-
6	21-52203	1	Banjo Fitting, Steel 1/4mm x 5/16NPT Female	-
7	07005-01412	2	Sealing Washer, Bonded M14	-
8	21-71049	1	Male Elbow, 90^0 Steel 1/4NPT x 1/4-37T	-
9	18-58712	1	Hose Assembly 3/16”ID x 20” 1/4FMS x 1/4FMS	-
10	21-58704	1	Swivel Run Tee, Steel 1/4-37T	-
11	21-50051	1	Banjo Fitting 12mm x 1/4-37T Male	-
12	07005-01212	2	Sealing Washer, Bonded M12	-
13	18-58714	1	Hose Assembly 3/16”ID x 6-14” 1/4FMS90 x 1/4 FMS	-
14	27-58703	1	Tube Assembly, Fuel Return	-

Fuel Lines

USCG A-1 SAE J1942 ABS Fuel Lines
from S/N xxxx-47988C

Drawing not available
at date of publication

KEY	PART NUMBER	QTY	DESCRIPTION	SERIAL NUMBER
1	21-74411	1	Male Elbow, 90^0 Steel 1/4NPT x 5/16-37T	-
2	18-58711	1	Hose Assembly 1/4”ID x 11-1/2” 1/4NPT Male Rigid x 5/16-37T	-
3	21-52203	1	Banjo Fitting, Steel 1/4 mm x 5/16NPT Female	-
4	07005-01412	2	Sealing Washer, Bonded M14	-
5	21-71049	1	Male Elbow, 90^0 Steel 1/4NPT x 1/4-37T	-
6	18-58718	1	Hose Assembly 3/16”ID x 18” 1/4FMS x 1/4FMS	-
7	21-58704	1	Swivel Run Tee, Steel. 1/4-37T	-
8	21-50051	1	Banjo Fitting 12 mm x 1/4-37T Male	-
9	07005-01212	2	Sealing Washer, Bonded M12	-
10	18-58714	1	Hose Assembly 3/16”ID x 6-14” 1/4FMS90 x 1/4 FMS	-
11	27-58703	1	Tube Assembly, Fuel Return	-

Notes

Fuel Injector

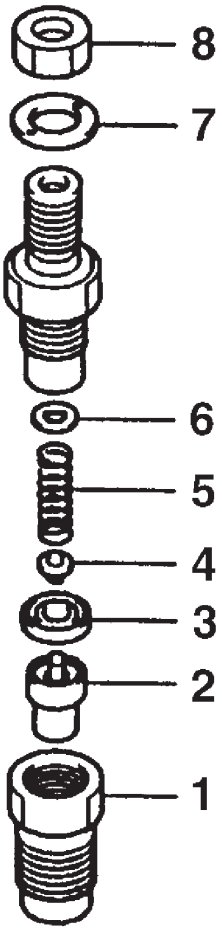

P864injector

Fuel Injector

KEY	PART NUMBER	QTY	DESCRIPTION	SERIAL NUMBER
+ +	23600-78200-71	4	Injector	-
1	23624-64010	1	Nozzle Retaining Nut	-
2	23620-76003-71	4	Nozzle (formerly #23620-69015)	-
3	23627-76001-71	4	Spacer	-
4	23618-76001-71	4	Pin	-
5	23618-64020	4	Spring, Nozzle Holder Pressure	-
6	23631-64010	**	Shim, T=0.900	-
	23631-64011	**	Shim, T=0.925	-
	23631-64012	**	Shim, T=0.950	-
	23631-64013	**	Shim, T=0.975	-
	23631-64014	**	Shim, T=1.000	-
	23631-64015	**	Shim, T=1.025	-
	23631-64016	**	Shim, T=1.050	-
	23631-64017	**	Shim, T=1.075	-
	23631-64018	**	Shim, T=1.100	-
	23631-64019	**	Shim, T=1.125	-
	23632-64010	**	Shim, T=1.150	-
	23632-64011	**	Shim, T=1.175	-
	23632-64012	**	Shim, T=1.200	-
	23632-64013	**	Shim, T=1.225	-
	23632-64014	**	Shim, T=1.250	-
	23632-64015	**	Shim, T=1.275	-
	23632-64016	**	Shim, T=1.300	-
	23632-64017	**	Shim, T=1.325	-
	23632-64018	**	Shim, T=1.350	-
	23632-64019	**	Shim, T=1.375	-
	23633-64010	**	Shim, T=1.400	-
	23633-64011	**	Shim, T=1.425	-
	23633-64012	**	Shim, T=1.450	-
	23633-64013	**	Shim, T=1.475	-
	23633-64014	**	Shim, T=1.500	-
	23633-64015	**	Shim, T=1.525	-
	23633-64016	**	Shim, T=1.550	-
	23633-64017	**	Shim, T=1.575	-
	23633-64018	**	Shim, T=1.600	-
	23633-64019	**	Shim, T=1.625	-
	23634-64010	**	Shim, T=1.650	-
	23634-64011	**	Shim, T=1.675	-
	23634-64012	**	Shim, T=1.700	-
	23634-64013	**	Shim, T=1.725	-
	23634-64014	**	Shim, T=1.750	-
	23634-64015	**	Shim, T=1.775	-
	23634-64016	**	Shim, T=1.800	-
	23634-64017	**	Shim, T=1.825	-
	23634-64018	**	Shim, T=1.850	-
	23634-64019	**	Shim, T=1.875	-
	23635-64010	**	Shim, T=1.900	-
	23635-64011	**	Shim, T=1.925	-
	23635-64012	**	Shim, T=1.950	-
7	23654-76001-71	4	Sealing Washer	-
8	23628-76001-71	4	Nut, Return Line Retaining (former # 23628-64010)	-
			**As required	

Fuel Feed Pump Assembly

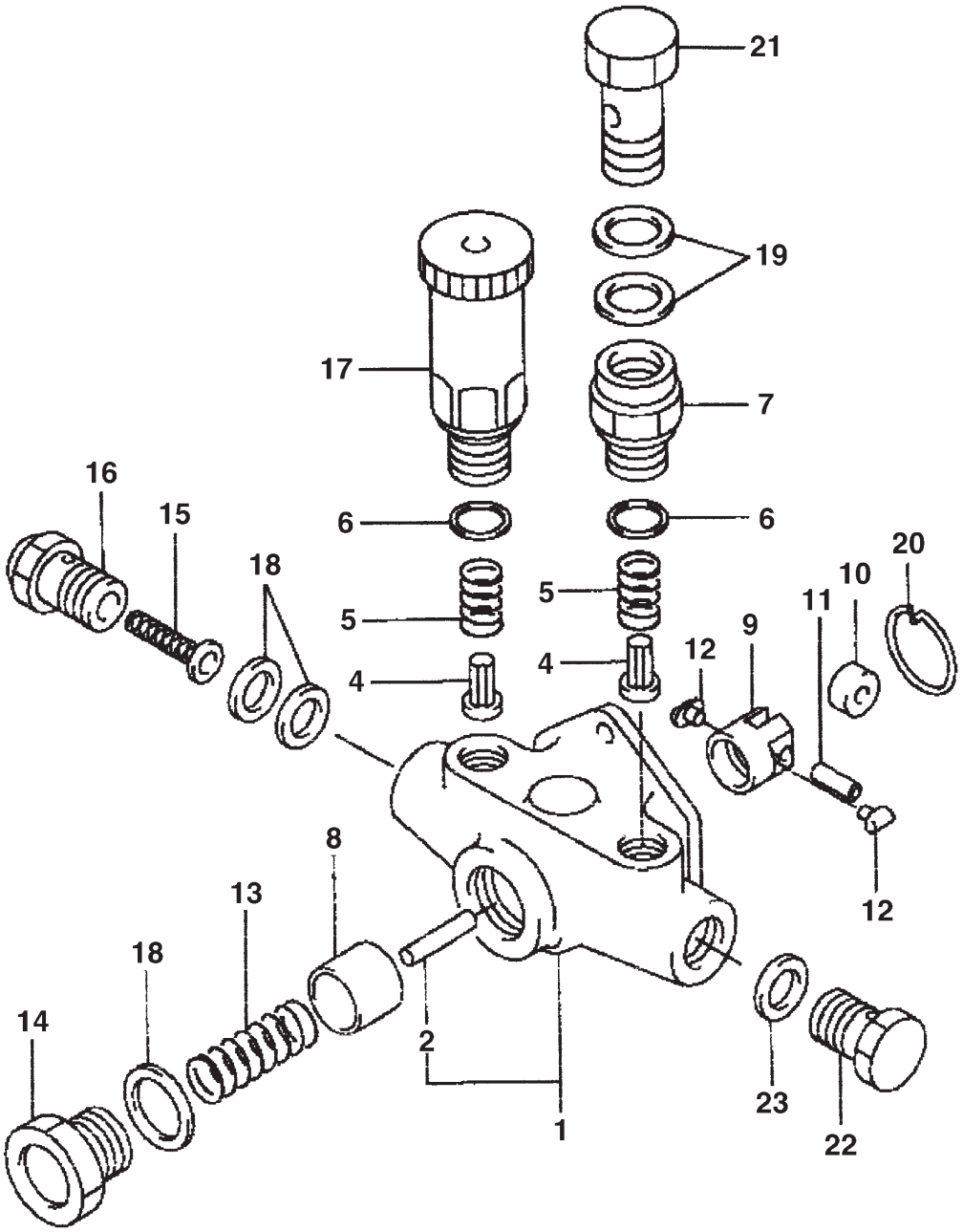

PLO300

Fuel Feed Pump Assembly

KEY	PART NUMBER	QTY	DESCRIPTION	SERIAL NUMBER
• •	26-58701	1	Feed Pump Assembly	-
•	192290-0060	1	Repair Kit (Seal #3 not included)	-
1	092120-0290	1	Housing Sub-Assembly (includes keys 2-3)	-
2	092168-0150	1	Rod	-
3	949150-2700	1	Seal (not shown)	-
4	09121-0011	2	Valve	-
5	092124-0010	2	Spring	-
6	22513-76001-71	2	Gasket	-
7	092127-0010	1	Support	-
8	092171-0011	1	Piston	-
9	092174-0030	1	Tappet	-
10	092176-0010	1	Roller	-
11	092178-0010	1	Pin	-
12	092179-0050	2	Block	-
13	092182-0020	1	Spring	-
14	092184-0021	1	Plug	-
15	092220-0040	1	Filter	-
16	092223-0070	1	Screw	-
17	092130-0050	1	Primer Pump	-
18	949018-1240	1	Washer	-
19	07005-01412	4	Washer	-
20	949072-0940	1	Snap Ring	-
21	67206-11014	1	Hollow Screw	-
22	092235-0020	1	Plug	-
23	949018-0550	1	Washer	-

Engine Electrical 12 Volt & 24 Volt Standard Ground

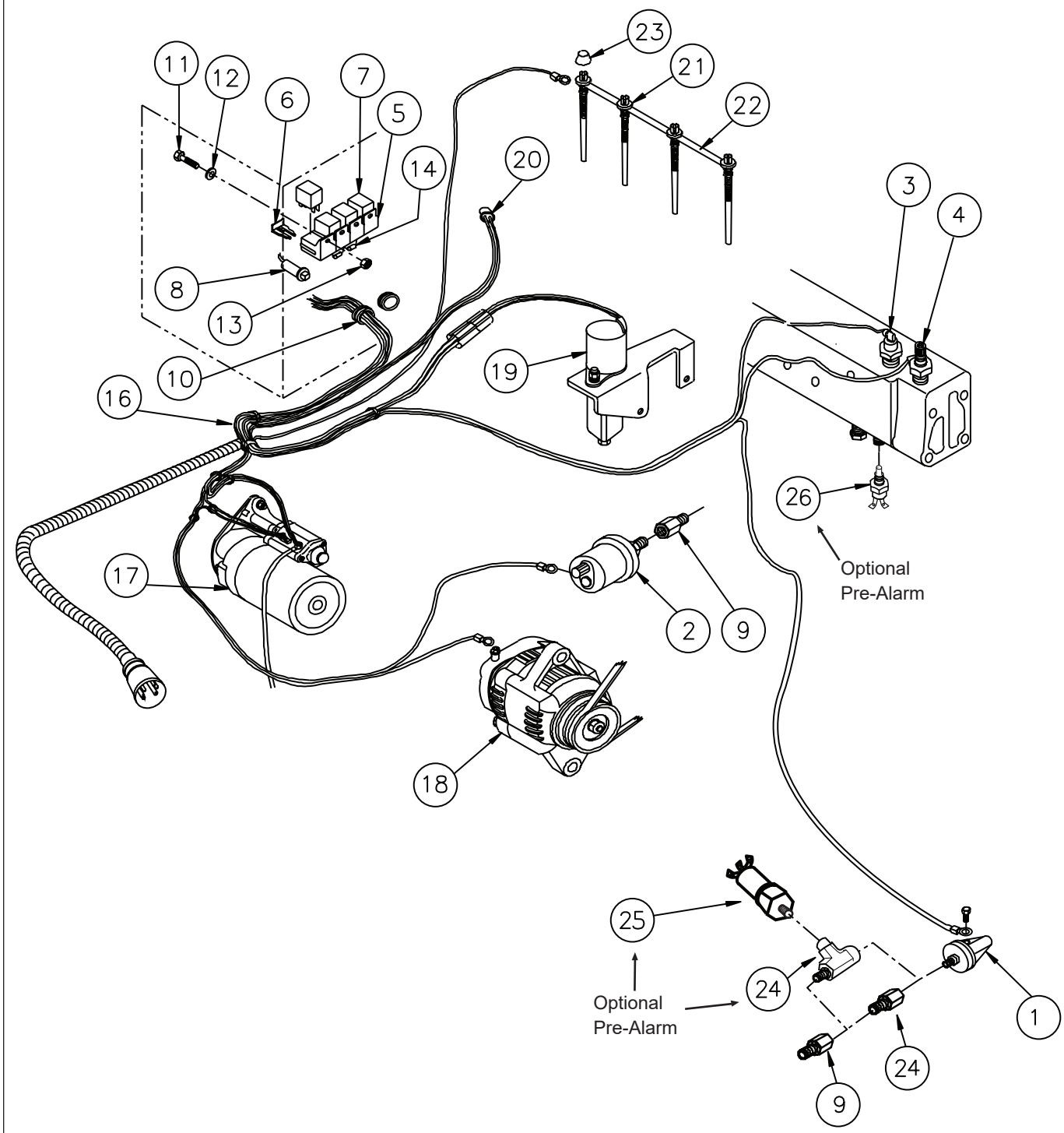

A-9511, A-9589 / C-4985

Engine Electrical 12 Volt & 24 Volt Standard Ground

KEY	PART NUMBER	QTY	DESCRIPTION	SERIAL NUMBER
1	22-40233	1	Oil Pressure Switch *	-
2	22-44871	1	Oil Pressure Sender - Single Station 0-150 PSI	-
	22-44872	1	Oil Pressure Sender - Dual Station 0-150 PSI	-
3	22-40944	1	Temperature Switch (former # 22-41025)	-
4	22-42055	1	Temperature Sender - Single Station	-
	22-70226	1	Temperature Sender - Dual Station 250°F	-
	21-51099	**	Bushing, Brass 3/8 NPT x 1/4 NPT } (use with dual station) sender as required	-
	21-00135	**	Bushing, Brass 1/2 NPT x 1/4 NPT	-
5	22-40391	4	Relay Base	-
6	22-40393	4	Terminal Retainer	-
7	22-42047	4	Relay, SPDT 12 VDC 50 Amp	-
	22-40710	4	Relay, SPDT 24 VDC 20 Amp	-
8	22-42043	1	Circuit Breaker, 15 Amp - Snap-In Type	-
	22-40674	1	Circuit Breaker, 15 Amp - Screw Mount Type	-
9	21-00139	2	Female Connector, Steel 1/8 NPT x 1/8 BSPT	-
10	00-40028	1	Grommet	-
11	12-00094	2	Machine Screw, BH Slotted #10-32 x 3/8" S/S	-
12	15-00032	2	Flat Washer #10	-
13	14-00001	2	Hex Nut, #10-32	-
14	22-41060	2	Diode, 6 Amp 50 Volt	-
15	22-40930	1	20' Wire Harness Extension (not shown)	-
16	22-48701	1	Wire Harness Assembly with Round "Merc" Connector (includes key #14)	-
17	28100-UC020	1	Starter, 12 Volt } (see mounting detail)	-
	22-48708	1	Starter, 24 Volt	-
18	27060-78301-71	1	Alternator, 12 Volt 40 Amp (see small frame alternators mounting detail)	-
	22-40278	1	Alternator, 24 Volt 40 Amp (see mounting detail)	-
	22-48718	1	Alternator, 24 Volt 25 Amp (see small frame alternators mounting detail) (former # 22-48711)	-
19	22-58701	1	Stop Solenoid 12 Volt } (see mounting detail)	-
	22-51201	1	Stop Solenoid 24 Volt	-
20	22-42014	1	Switch, High Exhaust Temperature 205°F (see wet exhaust detail)	-
21	19850-UC010	4	Glow Plug 12 Volt	-
	22-21208	4	Glow Plug 24 Volt	
22	19871-UC010	1	Buss Bar	-
23	80189-76001-71	4	Retaining Cap	-
24	21-00023	1	Female Connector, Steel 1/8 NPT x 1/8 NPT	-
	21-05400	1	Street Tee, Steel 1/8 NPT	-
25	22-40357	1	Oil Pressure Switch 25 PSI } Optional Pre-Alarm Functions	-
26	22-40359	1	Temperature Switch 200°F	-

**As required

Engine Electrical 12 Volt & 24 Volt Standard Ground

B+ System

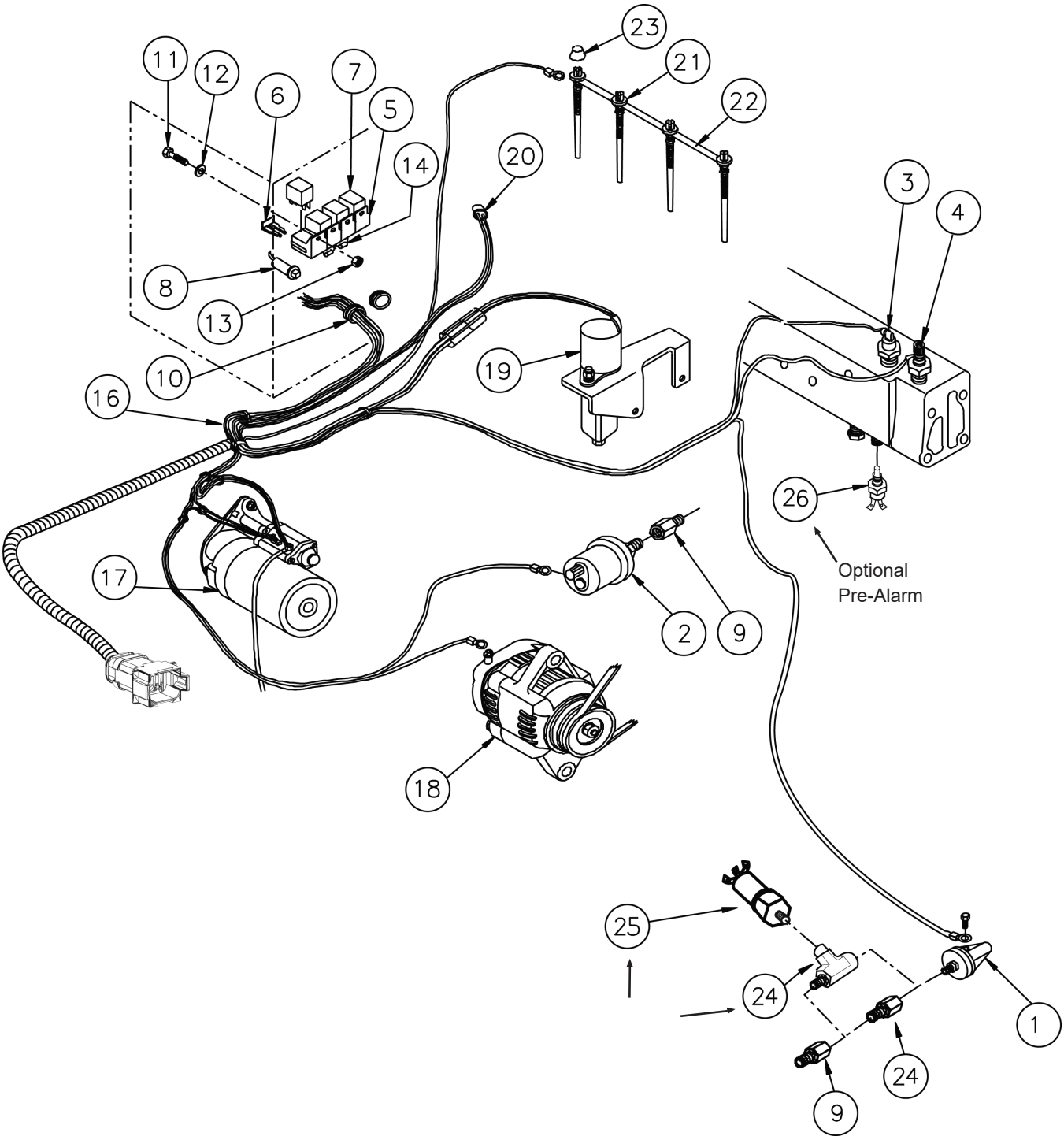

A-9511, A-9589 / C-4985

Engine Electrical 12 Volt & 24 Volt Standard Ground

B+ System

KEY	PART NUMBER	QTY	DESCRIPTION	SERIAL NUMBER
1	22-40233	1	Oil Pressure Switch *	-
2	22-44871	1	Oil Pressure Sender - Single Station 0-150 PSI	-
	22-44872	1	Oil Pressure Sender - Dual Station 0-150 PSI	-
3	22-40944	1	Temperature Switch	-
4	22-42055	1	Temperature Sender - Single Station	-
	22-70226	1	Temperature Sender - Dual Station 250°F	-
	21-51099	**	Bushing, Brass 3/8 NPT x 1/4 NPT } (use with dual station) sender as required	-
	21-00135	**	Bushing, Brass 1/2 NPT x 1/4 NPT	-
5	22-40391	4	Relay Base	-
6	22-40393	4	Terminal Retainer	-
7	22-42047	4	Relay, SPDT 12 VDC 50 Amp	-
	22-40710	4	Relay, SPDT 24 VDC 20 Amp	-
8	22-40018	1	Circuit Breaker, 10 Amp	-
9	21-00139	2	Female Connector, Steel 1/8 NPT x 1/8 BSPT	-
10	00-40028	1	Grommet	-
11	12-00094	2	Machine Screw, BH Slotted #10-32 x 3/8" S/S	-
12	15-00032	2	Flat Washer #10	-
13	14-00001	2	Hex Nut, #10-32	-
14	22-40299	2	Diode, 1 Amp 100 Volt	-
15	22-45620	1	20' Wire Harness Extension (not shown)	-
16	22-48717	1	Wire Harness Assembly with Square Deutsch Connector (includes key #14)	-
17	28700-UC020	1	Starter, 12 Volt } (see mounting detail)	-
	22-48708	1	Starter, 24 Volt	-
18	27060-78301-71	1	Alternator, 12 Volt 40 Amp (see small frame alternators mounting detail)	-
	22-48718	1	Alternator, 24 Volt 20 Amp (see small frame alternators mounting detail)	
19	22-58701	1	Stop Solenoid 12 Volt } (see mounting detail)	-
	22-51201	1	Stop Solenoid 24 Volt	-
20	22-42070	1	Switch, High Exhaust Temperature 205°F (see wet exhaust detail)	-
21	19850-UC010	4	Glow Plug 12 Volt	-
	22-21208	4	Glow Plug 24 Volt	
22	19871-UC010	1	Buss Bar	-
23	80189-76001-1	4	Retaining Cap	-
24	21-00023	1	Female Connector, Steel 1/8 NPT x 1/8 NPT	-
	21-05400	1	Street Tee, Steel 1/8 NPT	-
25	22-40357	1	Oil Pressure Switch 25 PSI } Optional Pre-Alarm Functions	-
26	22-40359	1	Temperature Switch 200°F	-

**As required

Engine Electrical 12 Volt & 24 Volt Isolated Ground

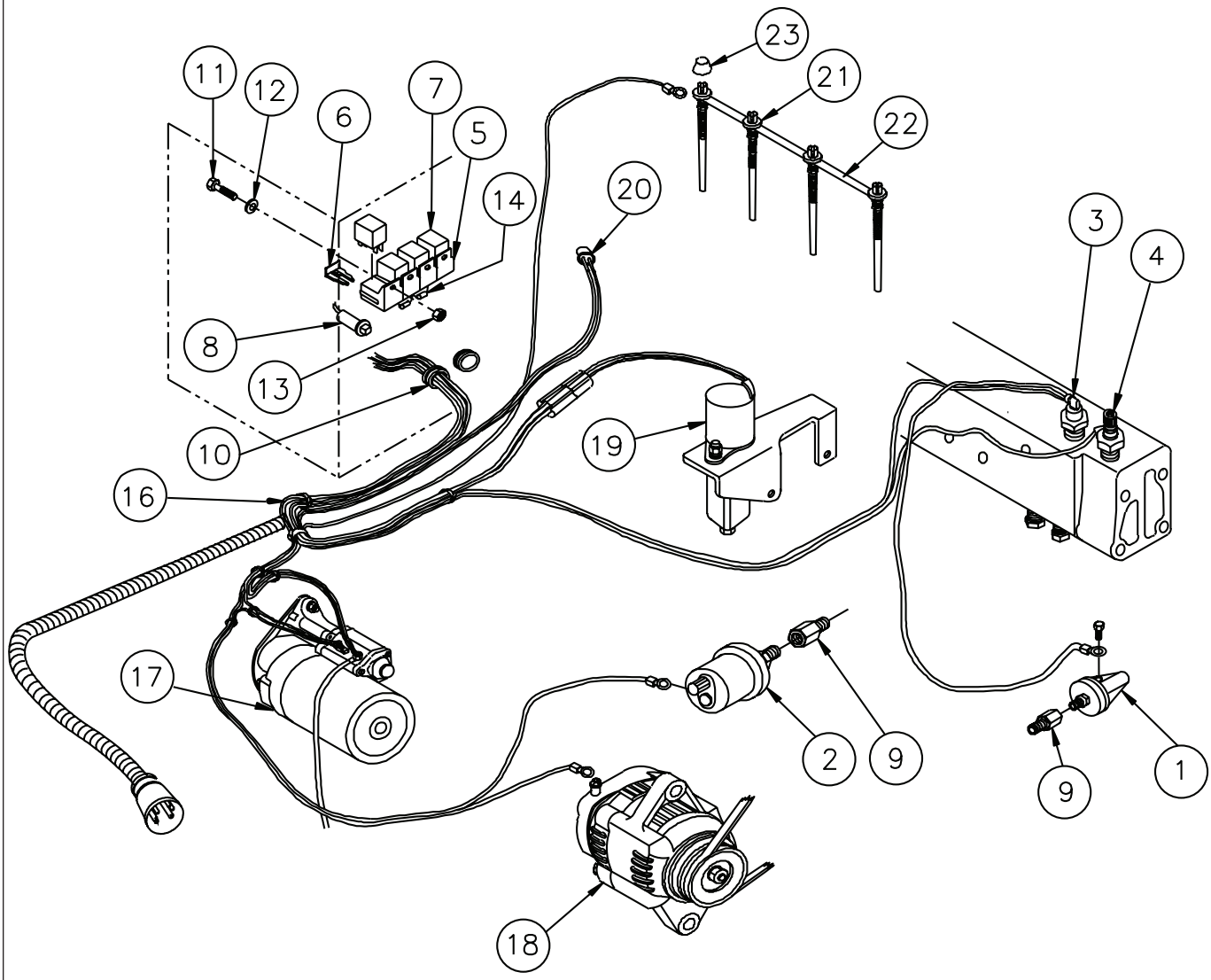

A-9588, A9590/ C-4985

Engine Electrical 12 Volt & 24 Volt Isolated Ground

KEY	PART NUMBER	QTY	DESCRIPTION	SERIAL NUMBER
1	22-40236	1	Oil Pressure Switch	-
2	22-40201	1	Oil Pressure Sender - 0-150 PSI, Single Station	-
3	22-40938	1	Temperature Switch - 210^0 F 3/8NPT (Former #22-40906)	-
4	22-44810	1	Temperature Sender - 250^0 F, Single Station	-
5	22-40391	5	Relay Base	-
6	22-40393	5	Terminal Retainer	-
7	22-42047	5	Relay, SPDT 12 Volt DC 50 Amp	-
	22-40710	5	Relay, SPDT 24 Volt DC 20 Amp	-
8	22-42043	1	Circuit Breaker, 15 Amp - Snap-In Type	-
	22-40674	1	Circuit Breaker, 15 Amp - Screw Mount Type	-
9	21-00139	2	Female Connector, Steel 1/8 NPT x 1/8 BSPT	-
10	00-40028	1	Grommet	-
11	12-00094	2	Machine Screw, BH Slotted #10-32 x 3/8" S/S	-
12	15-00032	2	Flat Washer	-
13	14-00001	2	Hex Nut, #10-32	-
14	22-41060	2	Diode, 6 Amp 50 Volt	-
15	22-40930	1	20' Wire Harness Extension (not shown)	-
16	22-48701	1	Wire Harness Assembly with Round “Merc” Connector (includes key 14)	-
	22-48707	1	Ground Harness Addition	-
17	22-46718	1	Starter, 12 Volt } (see mounting detail)	-
	22-48704	1	Starter, 24 Volt } (see mounting detail)	-
18	22-40332	1	Alternator, 12 Volt 90 Amp } (see mounting detail)	-
	22-40763	1	Alternator, 24 Volt 35 Amp } (see mounting detail)	-
	22-45406	1	Alternator, 12 Volt 40 Amp } (see small frame alternators & mounting detail)	-
	22-48719	1	Alternator, 24 Volt 20 Amp } (see small frame alternators & mounting detail) (former # 22-48712)	-
19	22-58701	1	Stop Solenoid 12 Volt } (see mounting detail)	-
	22-51201	1	Stop Solenoid 24 Volt } (see mounting detail)	-
20	22-42014	1	Switch, High Exhaust Temperature 205^{0}F (see wet exhaust detail)	-
21	22-21208	4	Glow Plug, 24 Volt	-
	19850-UC010	4	Glow Plug, 12 Volt	-
22	19871-UC010	1	Buss Bar	-
23	80189-76001-1	4	Retaining Cap	-

Engine Electrical 12 Volt & 24 Volt Isolated Ground

B+ System

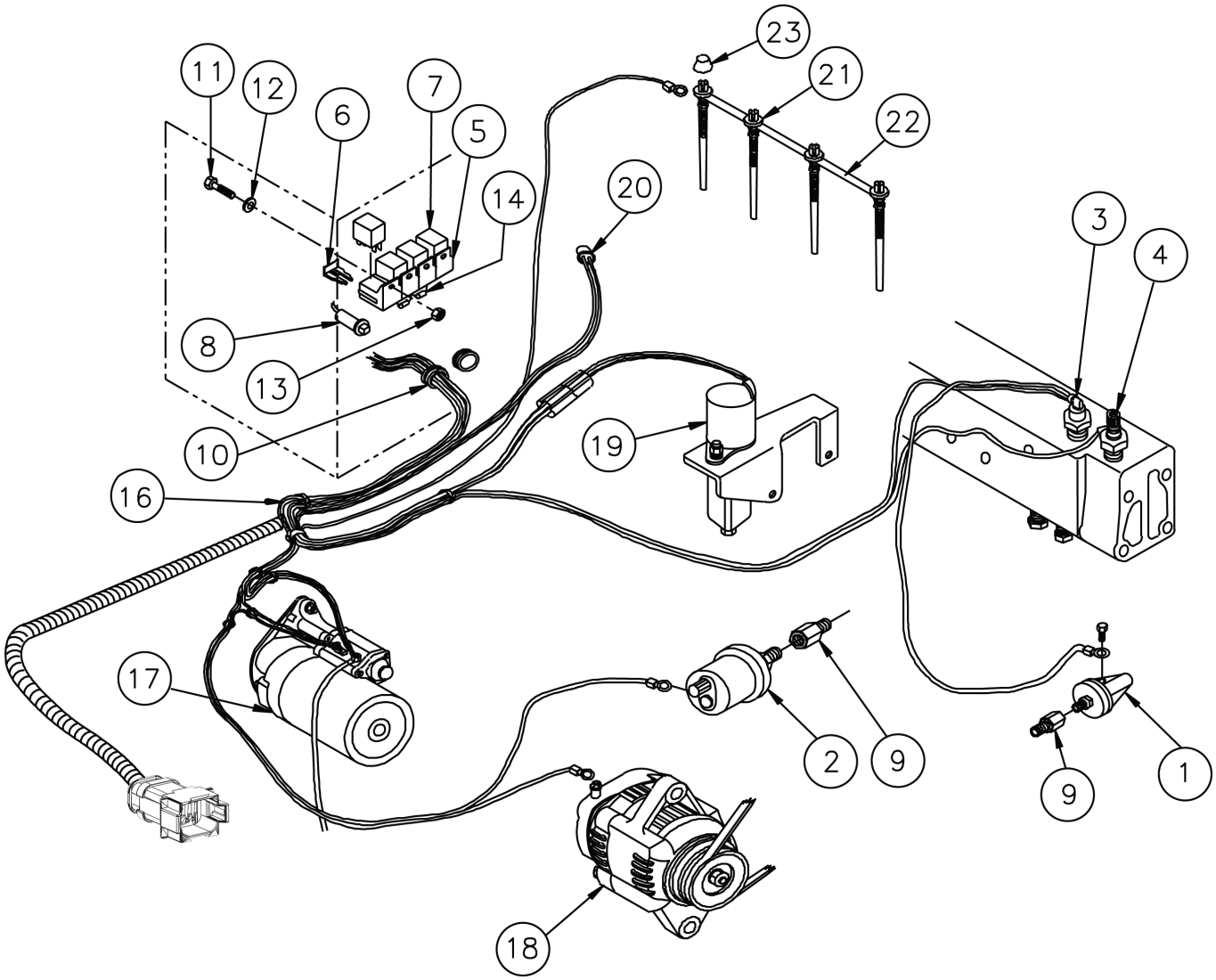

A-9588, A9590/ C-4985

Engine Electrical 12 Volt & 24 Volt Isolated Ground

B+ System

KEY	PART NUMBER	QTY	DESCRIPTION	SERIAL NUMBER
1	22-40236	1	Oil Pressure Switch	-
2	22-40201	1	Oil Pressure Sender - 0-150 PSI, Single Station	-
3	22-40938	1	Temperature Switch - 210^0 F 3/8NPT	-
4	22-44810	1	Temperature Sender - 250^0 F, Single Station	-
5	22-40391	5	Relay Base (without Retainer)	-
6	22-40393	5	Terminal Retainer	-
7	22-42047	5	Relay, SPDT 12 Volt DC 50 Amp	-
	22-40710	5	Relay, SPDT 24 Volt DC 20 Amp	-
8	22-40018	1	Circuit Breaker, 10 Amp	-
9	21-00139	2	Female Connector, Steel 1/8 NPT x 1/8 BSPT	-
10	00-40028	1	Grommet	-
11	12-00094	2	Machine Screw, BH Slotted #10-32 x 3/8" S/S	-
12	15-00032	2	Flat Washer	-
13	14-00001	2	Hex Nut, #10-32	-
14	22-40299	2	Diode, 1 Amp 200 Volt	-
15	22-45620	1	20' Wire Harness Extension (not shown)	-
16	22-48717	1	Wire Harness Assembly with square Deutsch Connector (includes key 14)	-
	22-48707	1	Ground Harness Addition	-
17	22-48716	1	Starter, 12 Volt } (see mounting detail)	-
	22-48704	1	Starter, 24 Volt } (see mounting detail)	-
18	22-45406	1	Alternator, 12 Volt 40 Amp } (see small frame alternators & mounting detail)	-
	22-48719	1	Alternator, 24 Volt 20 Amp } (see small frame alternators & mounting detail)	-
19	22-58701	1	Stop Solenoid 12 Volt } (see mounting detail)	-
	22-51201	1	Stop Solenoid 24 Volt } (see mounting detail)	-
20	22-42070	1	Switch, High Exhaust Temperature 205^{0}F (see wet exhaust detail)	-
21	22-21208	4	Glow Plug, 24 Volt	-
	19850-UC010	4	Glow Plug, 12 Volt	-
22	19871-UC010	1	Buss Bar	-
23	80189-76001-1	4	Retaining Cap	-

Stop Solenoid & Mounting

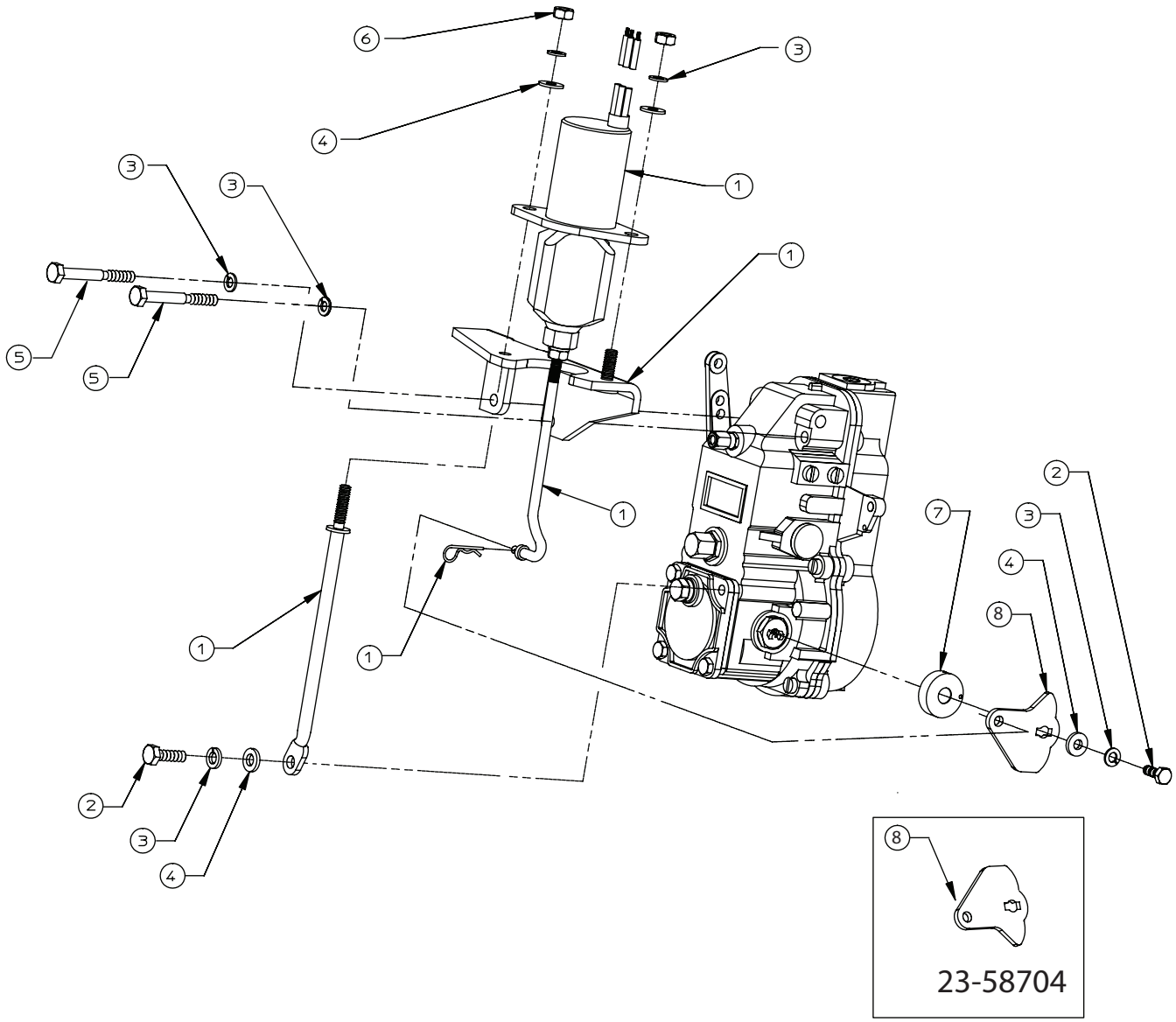

A-9566, A-9567 / 45183-B Synchro-Start Products, Inc.

KEY	PART NUMBER	QTY	DESCRIPTION	SERIAL NUMBER
1	22-58701	1	Stop Solenoid 12 Volt (with brackets)	-
	22-51201	1	Stop Solenoid 24 Volt (with brackets)	-
2	12-00031	1	Capscrew, Hex Head M6 x 1.0 x 25 mm	-
3	15-00018	6	Lock Washer, Helical M6	-
4	15-00008	4	Flat Washer, M6	-
5	12-01124	2	Capscrew, Hex Head M6 x 1.0 x 50 mm	-
6	14-01131	2	Hex Nut, M6 x 1.0	-
7	26-55001	1	Spring Cover	-
8	23-58706	1	Stop Lever 12 Volt Standard Ground (marked SE-5148)	-
	23-58704	1	Stop Lever 12 Volt ISO Ground & 24 Volt Standard or ISO Ground	-

Small Frame Alternators Without PTO

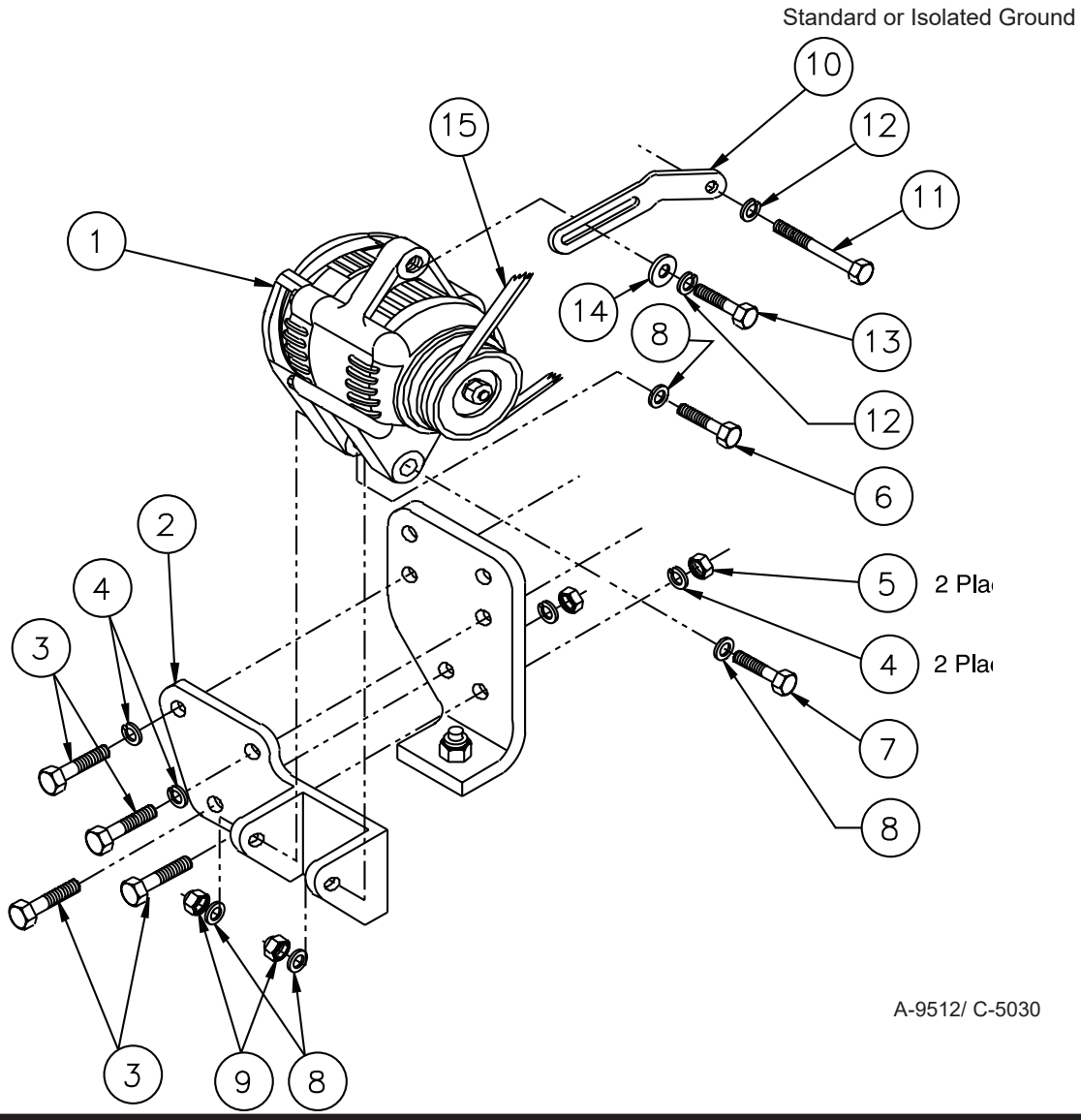

KEY	PART NUMBER	QTY	DESCRIPTION	SERIAL NUMBER
1	27060-78301-71	1	Alternator, 12 Volt 40 Amp Standard Ground (see parts detail)	-
	22-45406	1	Alternator, 12 Volt 40 Amp Isolated Ground	-
	22-48718	1	Alternator, 24 Volt 20 Amp Standard Ground (former # 22-48711)	-
	22-48719	1	Alternator, 24 Volt 20 Amp Isolated Ground (former # 22-48712)	-
2	23-48701	1	Bracket, Small Frame Alternator Mtg.	-
3	12-00811	4	Capscrew, Hex Head M10 x 1.25 x 30 mm	-
4	15-00802	4	Lock Washer, M10	-
5	14-00814	2	Hex Nut, M10 x 1.25	
6	12-00708	1	Capscrew, Hex Head M8 x 1.25 x 45 mm	-
7	12-00714	1	Capscrew, Hex Head M8 x 1.25 x 40 mm	-
8	15-00701	4	Flat Washer, M8	-
9	14-04802	2	Hex Nut, Nylock M8 x 1.25	-
10	23-48702	1	Tensioning Arm	-
11	12-00719	1	Capscrew, Hex Head M8 x 1.25 x 75 mm	-
12	15-00702	2	Lock Washer, M8	-
13	12-00753	1	Capscrew, Hex Head M8 x 1.25 x 30 mm	-
14	15-00201	1	Stud Washer	-
15	40-08704	1	Drive Belt (formerly #40-08701)	-

Medium Frame Alternators 12 & 24 Volt

Standard or Isolated Ground Without PTO
up to S/N xxxx-47987C

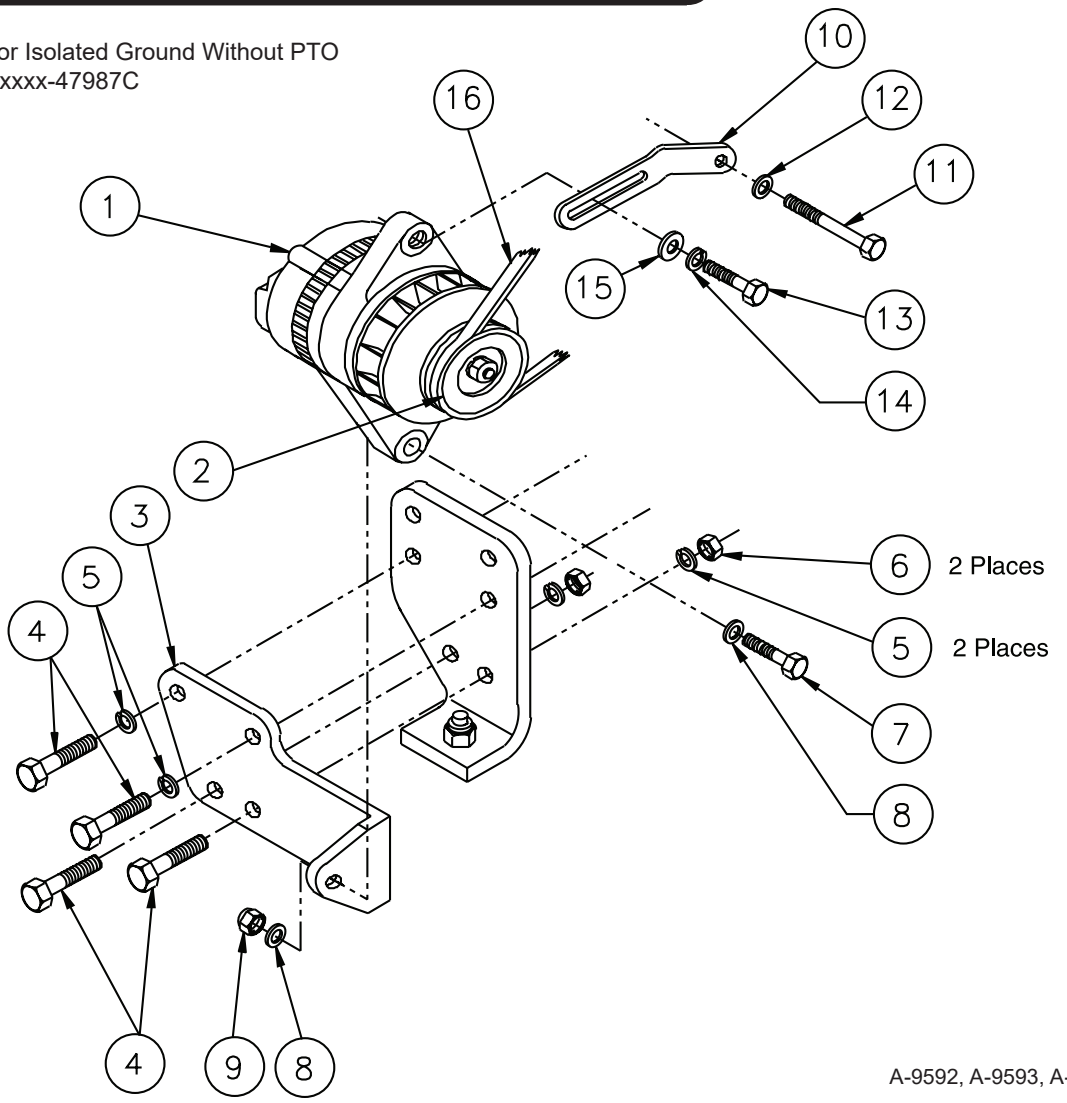

A-9592, A-9593, A-9594/ C-5032

KEY	PART NUMBER	QTY	DESCRIPTION	SERIAL NUMBER
1	22-40332	1	Alternator, 12 Volt 90 Amp, Isolated Ground	-
	22-40278	1	Alternator, 24 Volt 40 Amp, Standard Ground	-
	22-40763	1	Alternator, 24 Volt 35 Amp, Isolated Ground	-
2	34-41000	1	Pulley	-
3	23-48703	1	Bracket	-
4	12-00811	4	Capscrew, Hex Head M10 x 1.25 x 30 mm	-
5	15-00802	4	Lock Washer, M10	-
6	14-00814	2	Hex Nut, M10 x 1.25	-
7	12-00518	1	Capscrew, Hex Head 1/2-13 x 2-1/2"	-
8	15-00504	2	Flat Washer	-
9	14-00512	1	Hex Nut, Nylock 1/2-13	-
10	23-48702	1	Tensioning Arm	-
11	12-00719	1	Capscrew, Hex Head M8 x 1.25 x 75 mm	-
12	15-00702	1	Lock Washer, M8	-
13	12-00213	1	Capscrew, Hex Head 5/16-18 x 1-1/4"	-
14	15-00202	1	Lock Washer, 5/16	-
15	15-00221	1	Washer, SAE 5/16	-
16	40-08702	1	Drive Belt, 31/64" x 43-3/8"	-

Small Frame Alternator With PTO

Standard or Isolated Ground

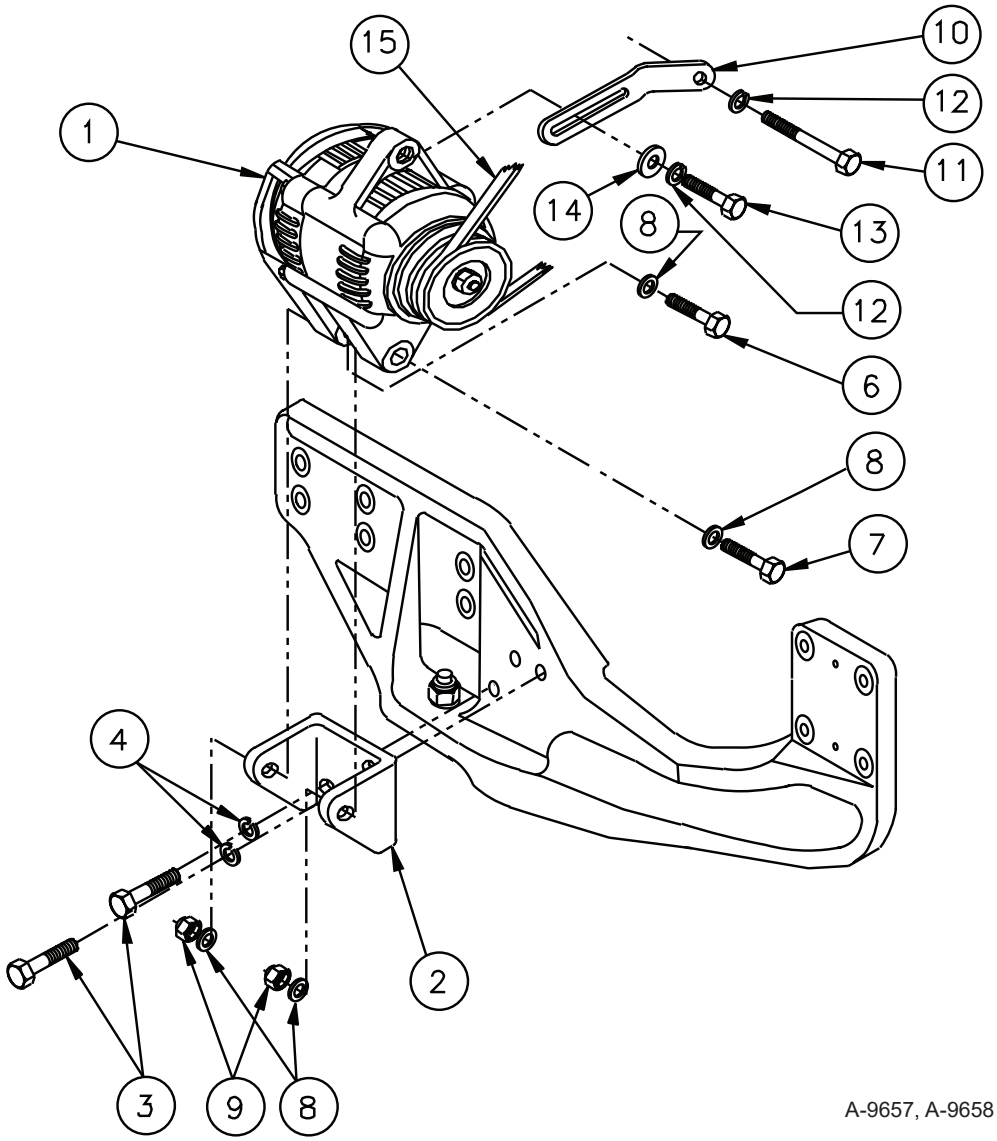

A-9657, A-9658 / C-5092

KEY	PART NUMBER	QTY	DESCRIPTION	SERIAL NUMBER
1	27060-78301-71	1	Alternator, 12 Volt 40 Amp Standard Ground	-
	22-45406	1	Alternator, 12 Volt 40 Amp Isolated Ground	-
	22-48718	1	Alternator, 24 Volt 20 Amp Standard Ground (former # 22-48711)	-
	22-48719	1	Alternator, 24 Volt 20 Amp Isolated Ground (former # 22-48712)	-
2	23-48704	1	Bracket, Small Frame Alternator Mtg.	-
3	12-00831	2	Capscrew, Hex Head M10 x 1.25 x 25 mm	-
4	15-00802	2	Lock Washer, M10	-
6	12-00708	1	Capscrew, Hex Head M8 x 1.25 x 45 mm	-
7	12-00714	1	Capscrew, Hex Head M8 x 1.25 x 40 mm	-
8	15-00701	4	Flat Washer M8	-
9	14-04802	2	Hex Nut, Nylock M8 x 1.25	-
10	23-48702	1	Tensioning Arm	-
11	12-00719	1	Capscrew, Hex Head M8 x 1.25 x 75 mm	-
12	15-00702	1	Lock Washer, M8	-
13	12-00753	1	Capscrew, Hex Head M8 x 1.25 x 30 mm	-
14	15-00201	1	Stud Washer	-
15	40-08702	2	Drive Belt	-

Medium Frame Alternators 12 & 24 Volt

Standard or Isolated Ground With PTO
Up To S/N xxxx-47987C

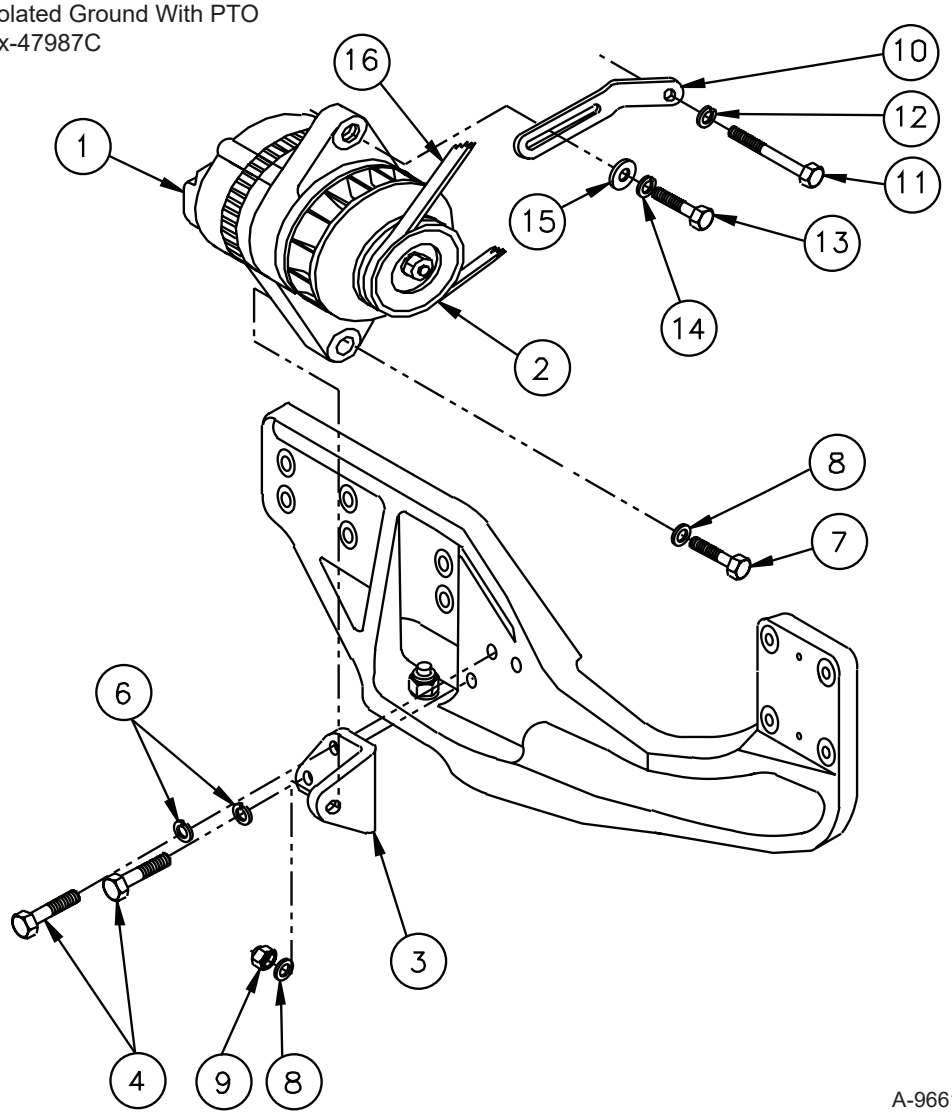

A-9661, A-9662 / C-5093

KEY	PART NUMBER	QTY	DESCRIPTION	SERIAL NUMBER
1	22-40332	1	Alternator, 12 Volt 90 Amp Isolated Ground	-
	22-40278	1	Alternator, 24 Volt 40 Amp Standard Ground	-
	22-40763	1	Alternator, 24 Volt 35 Amp Isolated Ground	-
2	34-41000	1	Pulley	-
3	23-48705	1	Bracket	-
4	12-00831	2	Capscrew, Hex Head M10 x 1.5 x 30 mm	-
6	15-00802	2	Lock Washer, M10	
7	12-00518	1	Capscrew, Hex Head 1/2-13 x 2-1/2"	-
8	15-00504	2	Flat Washer	-
9	14-00512	1	Hex Nut, Nylock 1/2-13	-
10	23-48702	1	Tensioning Arm	-
11	12-00719	1	Capscrew, Hex Head M8 x 1.25 x 75 mm	-
12	15-00702	1	Lock Washer, M8	-
13	12-00213	1	Capscrew, Hex Head 5/16-18 x 1-1/4"	-
14	15-00202	1	Lock Washer, 5/16	-
15	15-00221	1	Washer, SAE 5/16	-
16	40-08703	1	Drive Belt	-

Starter - 12 & 24 Volt Standard Ground

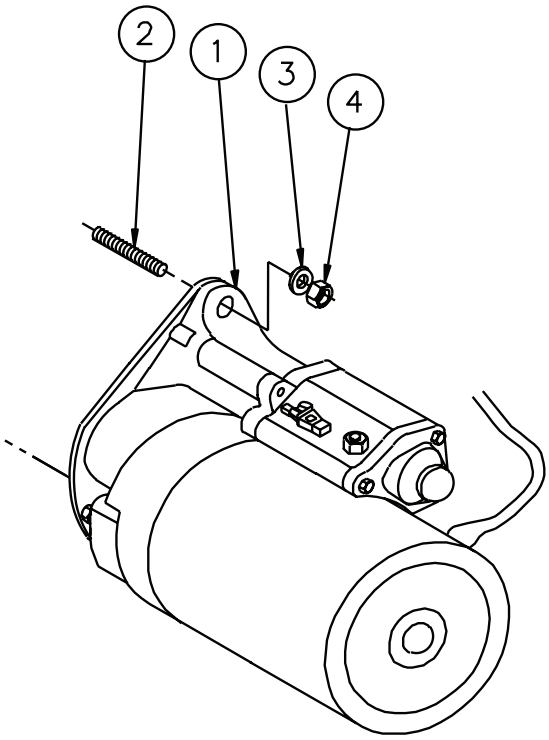

B-7546ver1

KEY	PART NUMBER	QTY	DESCRIPTION	SERIAL NUMBER
1	28100-UC020	1	Starter Assembly 12 Volt	-
	22-48710	1	Starter Assembly 24 Volt *	-
2	90116-12104-71	2	Stud	-
3	15-00912	2	Lock Washer M12	-
4	14-00902	2	Hex Nut M12 x 1.25	-
			* Replaced by Kit 22-48710 - See page showing 24 volt standard & isolated ground starters	

Starter - 12 Volt Isolated Ground

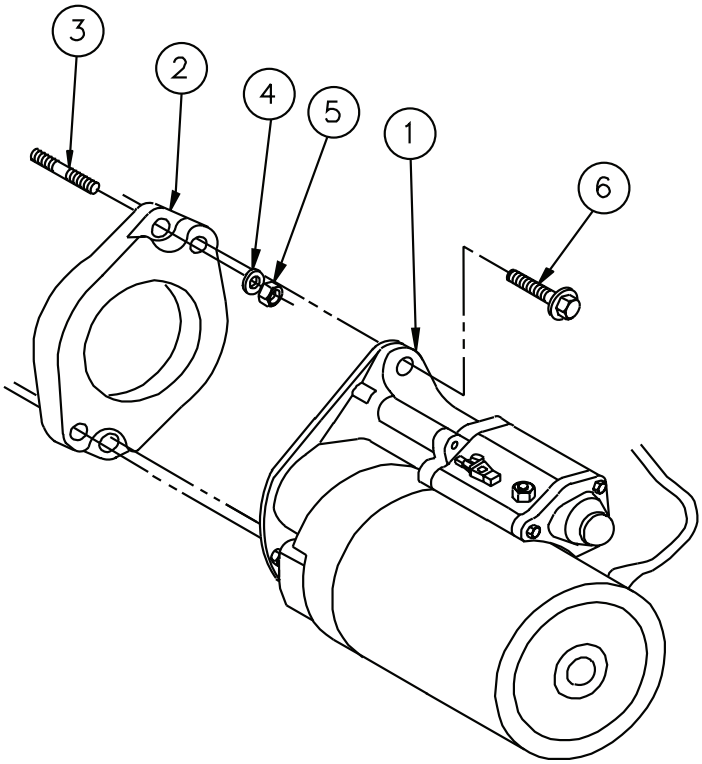

B-7546v2

KEY	PART NUMBER	QTY	DESCRIPTION	SERIAL NUMBER
1	22-48716	1	Starter Assembly 12 Volt	-
2	31-48702	1	Adapter	-
3	90116-12104-1	2	Stud	-
4	15-00912	2	Lock Washer M12	-
5	12-00902	2	Hex Nut M12 x 1.25	-
6	R13518	2	Capscrew, Flange Head M12 x 1.75 x 40*	-
			*Note: Replaces Socket Head Screw and Lock Washer to ease assembly.	

Starter - 24 Volt Standard and Isolated Ground

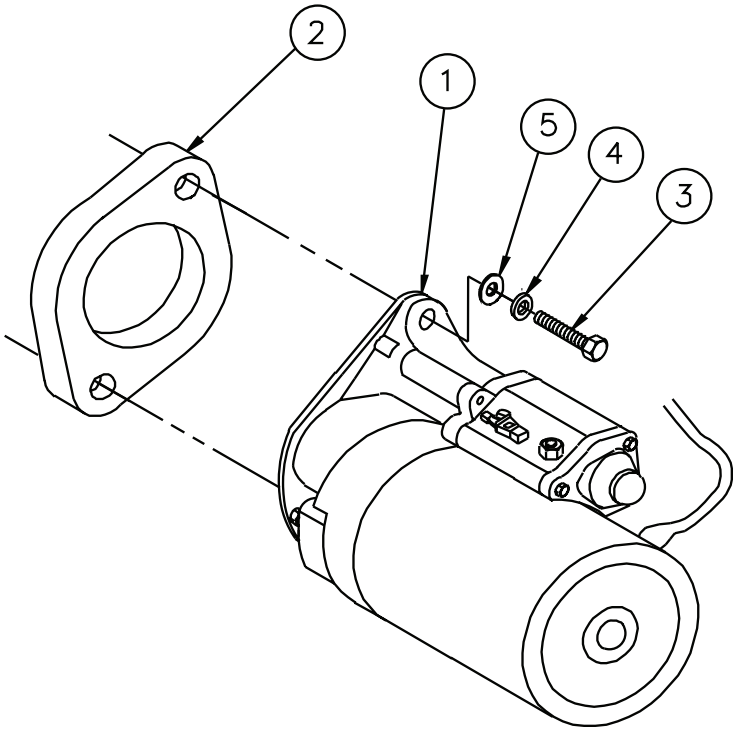

B-7546v3

KEY	PART NUMBER	QTY	DESCRIPTION	SERIAL NUMBER
1	22-48704	1	Starter Assembly 24 Volt Isolated ground	-
	22-48708	1	Starter 24 Volt standard ground *	-
2	31-48702	1	Adapter *	-
3	12-00949	2	Capscrew, M12 x 1.25 x 60 mm *	-
4	15-00912	2	Lock Washer M12 *	-
5	15-00007	2	Flat Washer*	-

* All items included in starter kit 22-48710

S-1 Control Panel 12 & 24 Volt

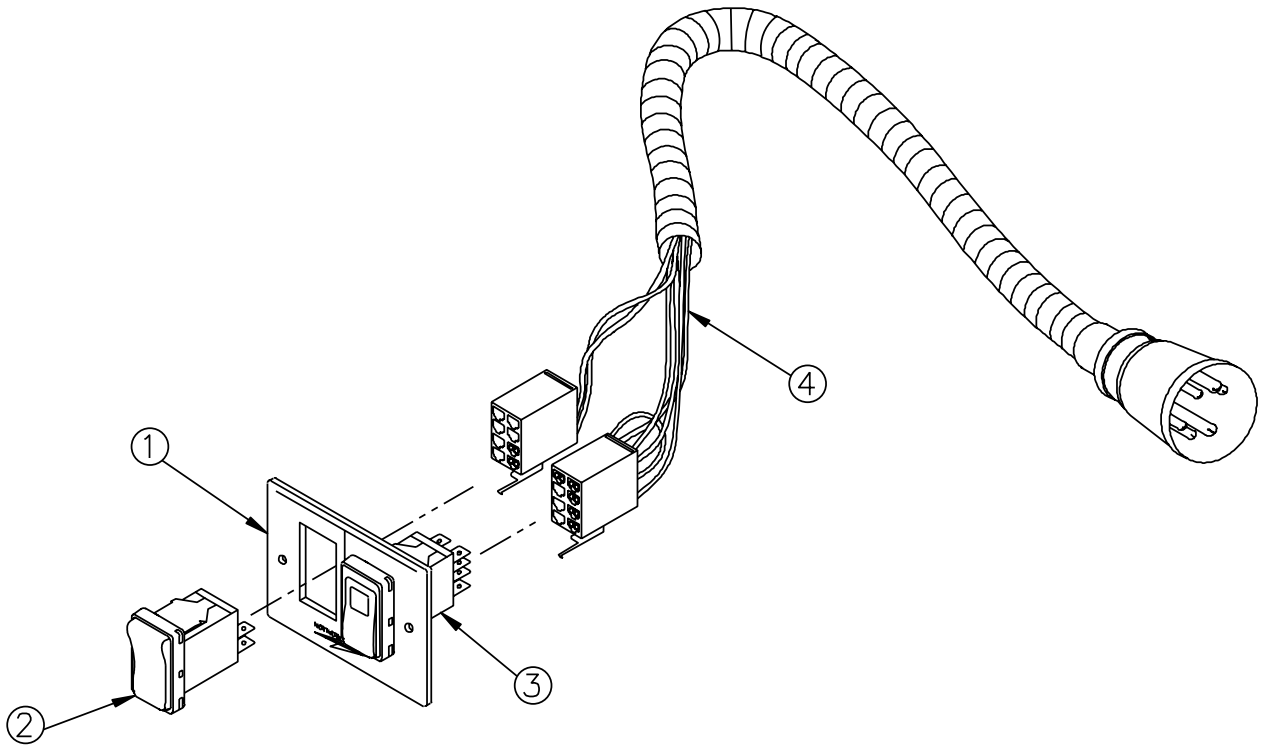

A-8551, A-8552/ B-5970

KEY	PART NUMBER	QTY	DESCRIPTION	SERIAL NUMBER
••	22-92110	1	S-1 Start/Stop Control Panel, 12 Volt (includes all keys)	-
••	22-42110	1	S-1 Start/Stop Control Panel, 24 Volt (includes all keys)	-
1	00-40013	1	Plate, S-1 Control Panel	-
2	22-90167	1	Rocker Switch	-
3	22-90162	1	Rocker Switch	-
4	22-42063	1	Wire Harness, 12 Volt	-
	22-42067	1	Wire Harness, 24 Volt	-
5	00-00013	1	Label "12 Volt" *	-
	00-00014	1	Label "24 Volt" *	-
6	22-40012	1	Resistor, 200 Ohm, 3 Watt (24 Volt Panel only) *	-

*Not shown

S-1 Control Panel 12 & 24 Volt

B+ Electrical Systems

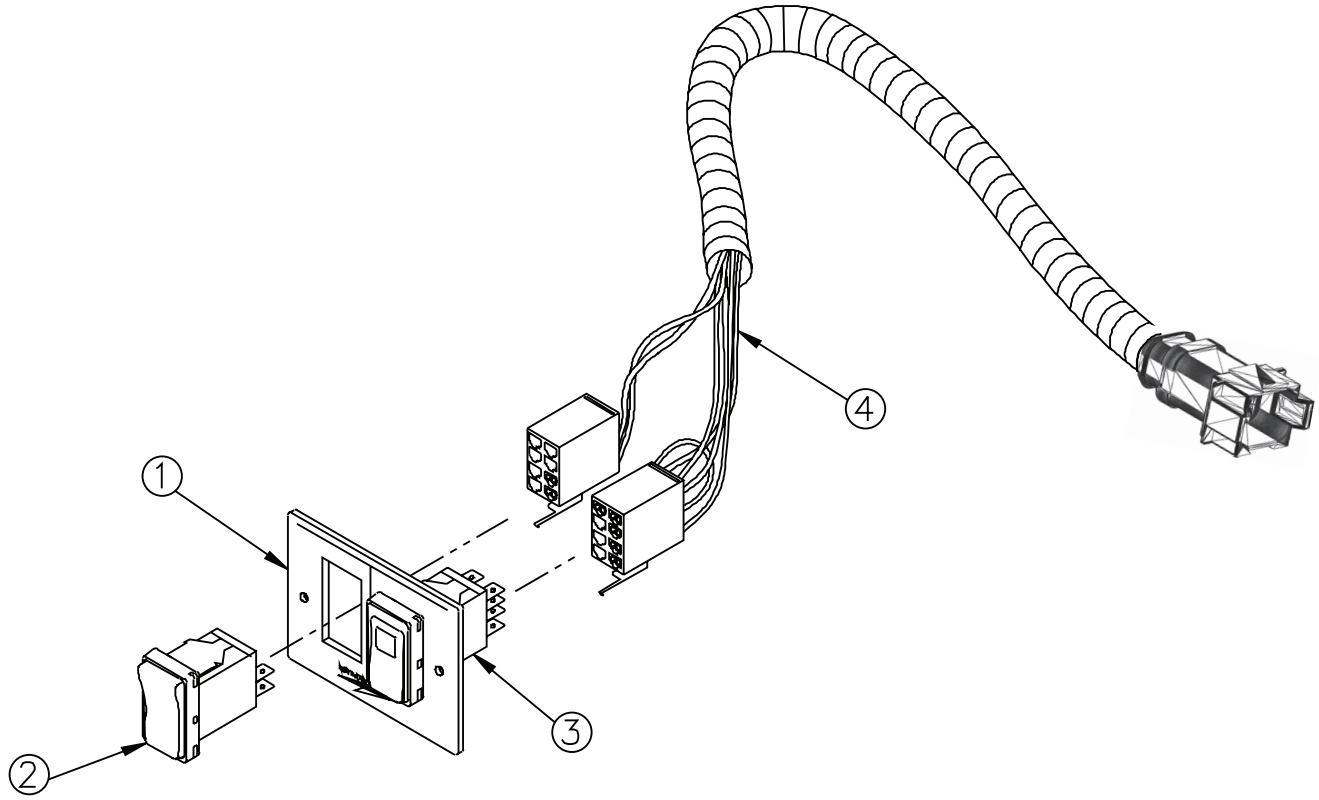

KEY	PART NUMBER	QTY	DESCRIPTION	SERIAL NUMBER
••	22-95600	1	S-1 Start/Stop Control Panel (includes all keys)	-
1	00-40013	1	Plate, S-1 Control Panel	-
2	22-90167	1	Rocker Switch, Momentary (On)-Off	-
3	22-90362	1	Rocker Switch, Momentary (On)-Off-(On) Green Lamp	-
4	22-45602	1	Wire Harness	-
5	00-00048	1	Label "12-24 Volt" (Not Shown)	-

S-1B Control Panel 12 & 24 Volt

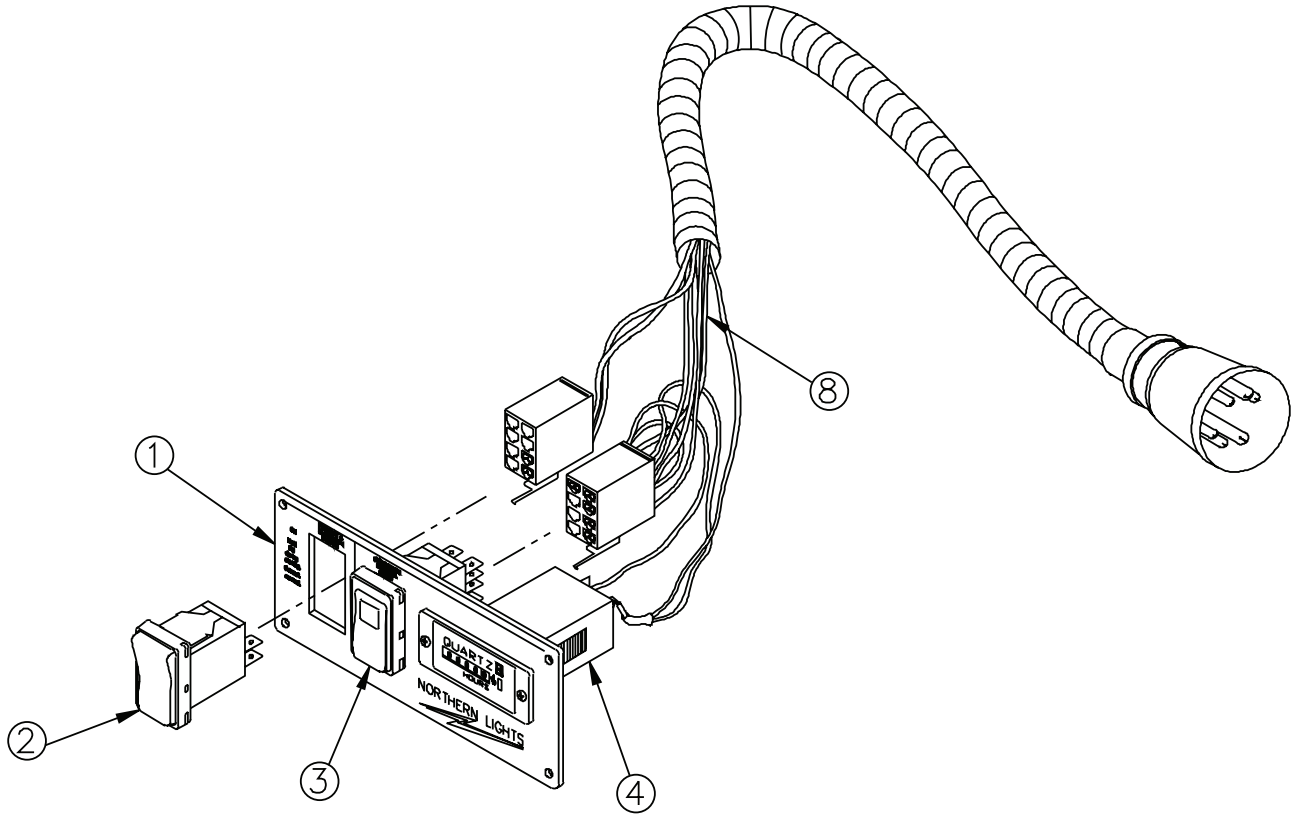

A-8553-4 / B-5971

KEY	PART NUMBER	QTY	DESCRIPTION	SERIAL NUMBER
	22-92120	1	S-1B Control Panel Assembly, 12 Volt (includes all keys)	-
	22-92125	1	S-1B Control Panel Assembly, 24 Volt (includes all keys)	-
1	28-90003	1	Plate, S-1B Control Panel	-
2	22-90167	1	Rocker Switch	-
3	22-90362	1	Rocker Switch	-
4	22-90009	1	Hourmeter	-
5	12-00093	2	Machine Screw, Round Head #6-32 x 1/2" S/S *	-
6	15-00030	2	Star Washer *	-
7	14-00015	2	Hex Nut *	-
8	22-42063	1	Wire Harness without Resistor 12V	-
	22-42064	1	Wire Harness with Resistor 24V	-
9	00-00013	1	Label "12 Volt" *	-
	00-00014	1	Label "24 Volt" *	-
10	22-40012	1	Resistor, 200 OHM **	-

*Not shown

**Note: Shown for spare parts reference, included in Harness Assembly.

Series 1-B Start/Stop Control Panel

B+ Electrical Systems

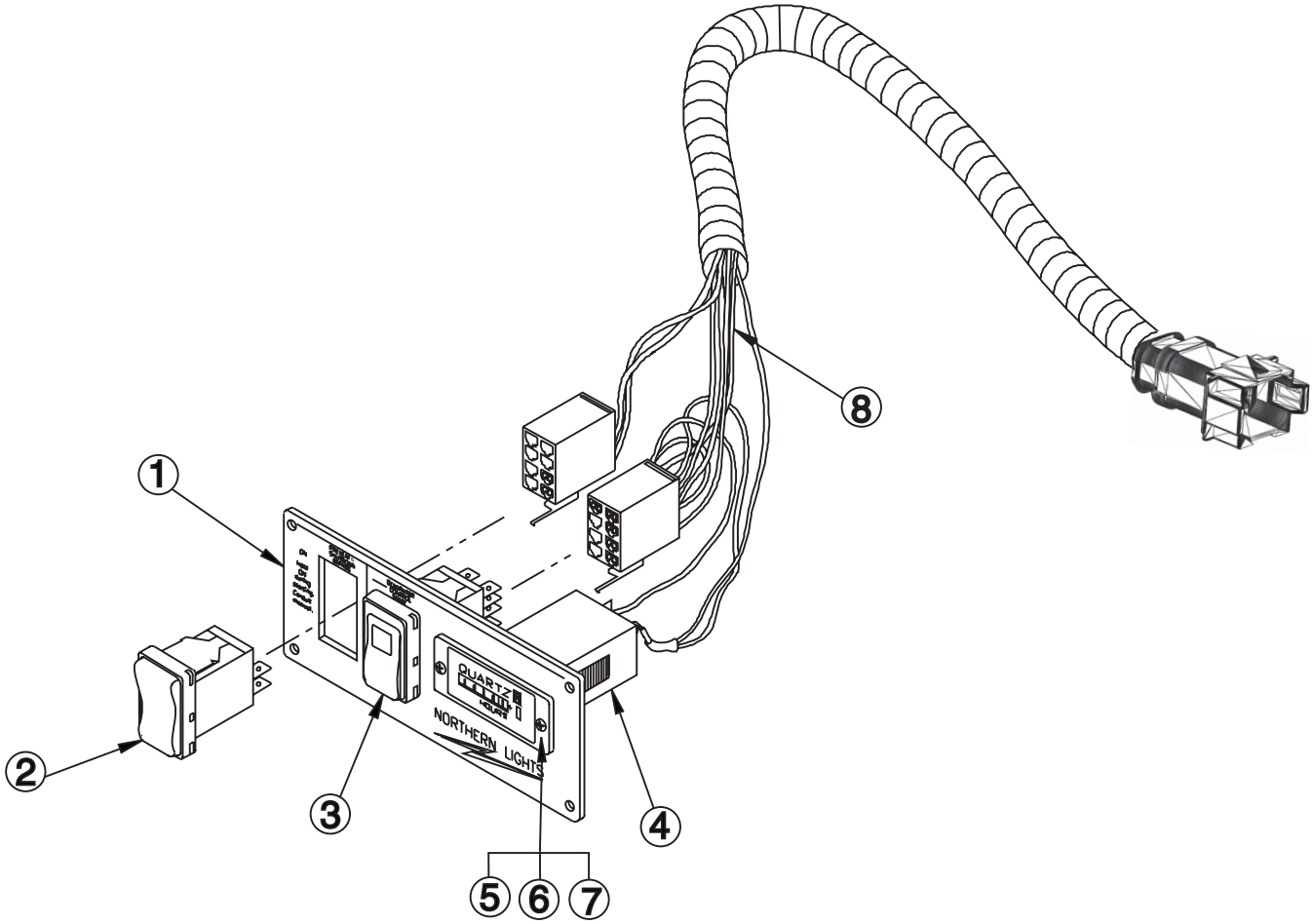

KEY	PART NUMBER	QTY	DESCRIPTION	SERIAL NUMBER
••	22-95605	1	Complete Series 1-B Start/Stop Control Panel (includes all keys)	-
1	28-90003	1	Plate	-
2	22-90167	1	Rocker Switch, Momentary (On)-Off	-
3	22-90362	1	Rocker Switch, Green LED (On)-Off-(On) Green Lamp	-
4	22-90009	1	Hour Meter	-
5	12-00093	2	Machine Screw, Round Head Phillips #6 - 32 x 1/2"	-
6	15-00030	2	Star Washer, Internal #6, Stainless Steel	-
7	14-00015	2	Hex Nut #6 - 32, Stainless Steel	-
8	22-45603	1	Wire harness	-
9	00-00048	1	Label “12-24 Volts” (Not shown)	-

Flush Mount S-3C Control Panel 12 & 24 Volt

Standard Line Black Bevel Guages

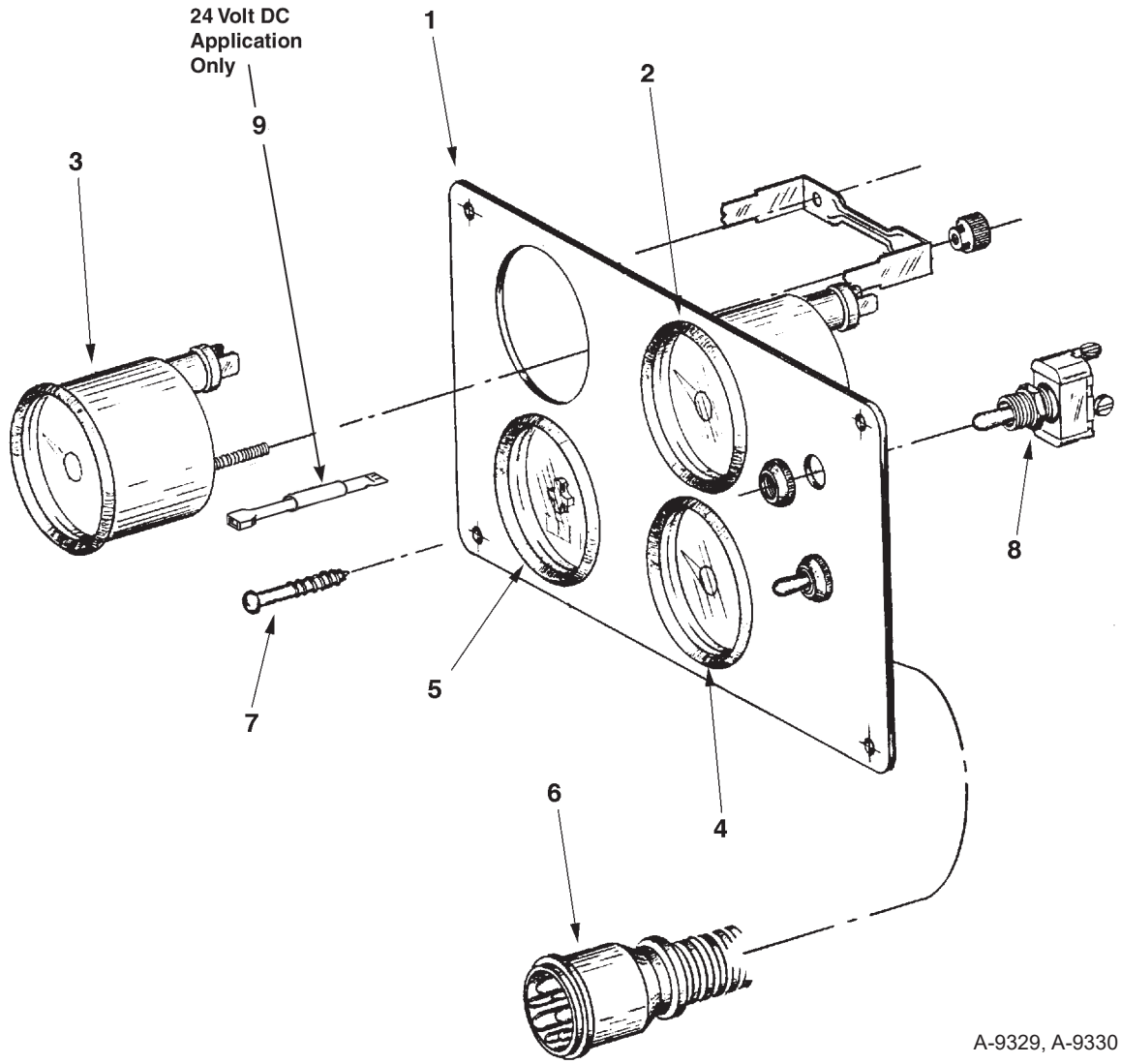

A-9329, A-9330 / C-2441

KEY	PART NUMBER	QTY	DESCRIPTION	SERIAL NUMBER
••	22-98708	1	S-3C Control Panel 12 Volt (includes all keys)	-
••	22-98709	1	S-3C Control Panel 24 Volt (includes all keys)	-
1	28-90010	1	Panel Plate	-
2	37-40015	1	Oil Pressure Gauge, 0-150 PSI	-
3	37-40011	1	Engine Temperature Gauge, 0-250^{0}F	-
4	37-40012	1	DC Voltmeter, 12 Volt	-
	37-40014	1	DC Voltmeter, 24 Volt	-
5	27-40013	1	Hourmeter	-
6	22-42024	1	Panel Wire Harness	-
7	12-90007	**	Self Tapping Screw, Oval Head Phillips #6 x 3/4"	-
8	22-41051	2	Toggle Switch	-
9	22-40004	2	Resistor Kit (24 volt panel only)	-
10	22-44852	**	12 Volt Bulb (not shown)	-
	22-44853	**	24 Volt Bulb (not shown)	-

**As required

Flush Mount Dual Station Control Panel 12 Volt

SAE Black Bezel Gauges

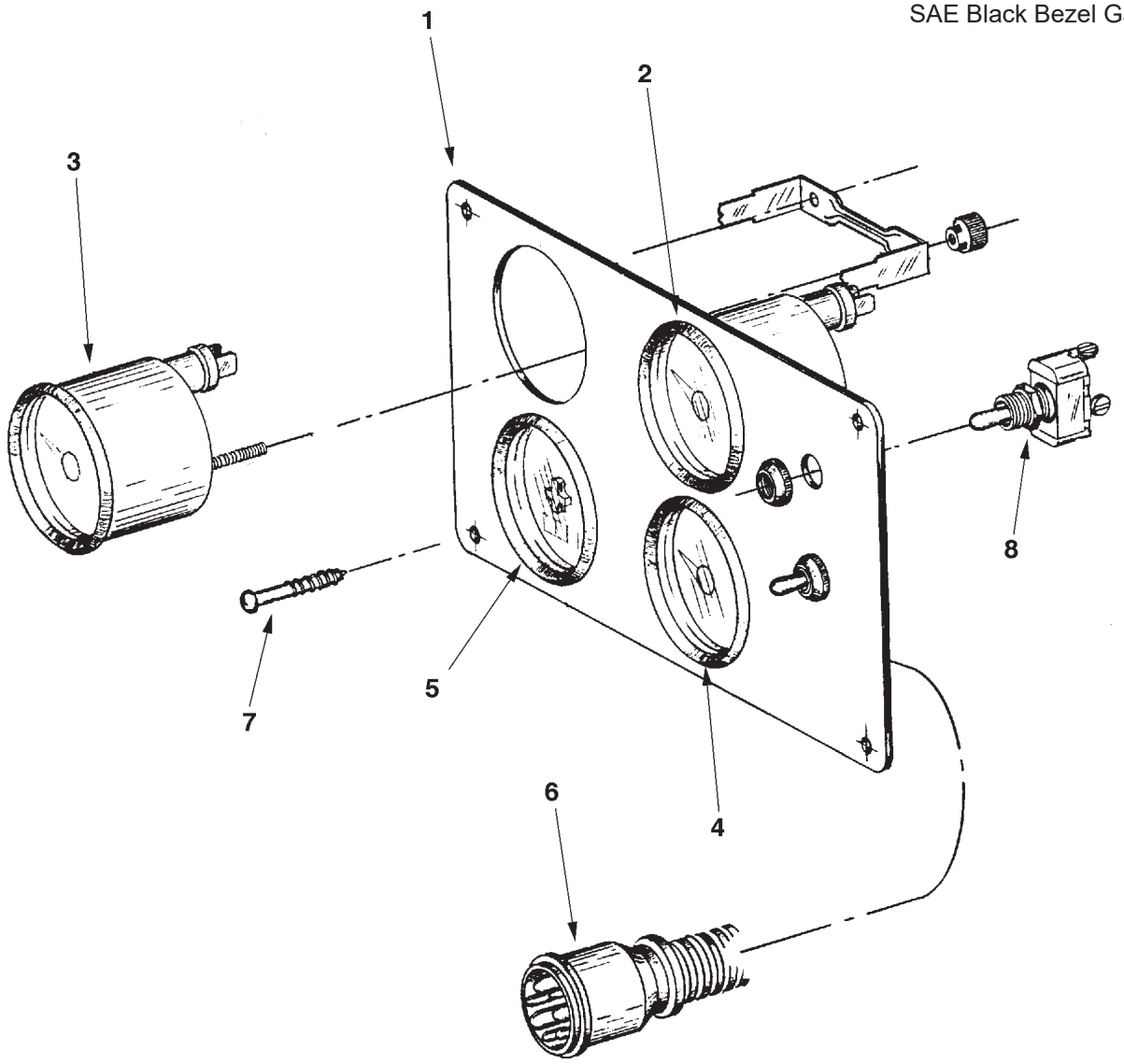

KEY	PART NUMBER	QTY	DESCRIPTION	SERIAL NUMBER
••	22-98716	1	S-3C Control Panel, 12 Volt (includes all keys)	-
1	28-90010	1	Panel Plate	-
2	37-40033	1	Oil Pressure Gauge, 0-80 PSI 12 Volt	-
3	37-40031	1	Temperature Gauge, 0- 250^{0}F 12 Volt	-
4	37-40032	1	DC Voltmeter, 8 - 16 VDC	-
5	37-40020	1	Hourmeter 12/ 24 Volt	-
6	22-42087	1	Panel Wire Harness	-
7	12-90007	4	Self Tapping Screw, Oval Head Phillips #6 x 3/4”	-
8	22-41051	2	Toggle Switch	-
9	16-01001	4	O-Ring (for gauge sealing - not shown)	-
10	22-40272	**	12 Volt Bulb (not shown)	-
11	22-40415	3	Bulb Diffuser Red (not shown)	-

**As required

Flush Mount Dual Station Control Panel 12 & 24 Volt

Viewline Black Bezel Gauges

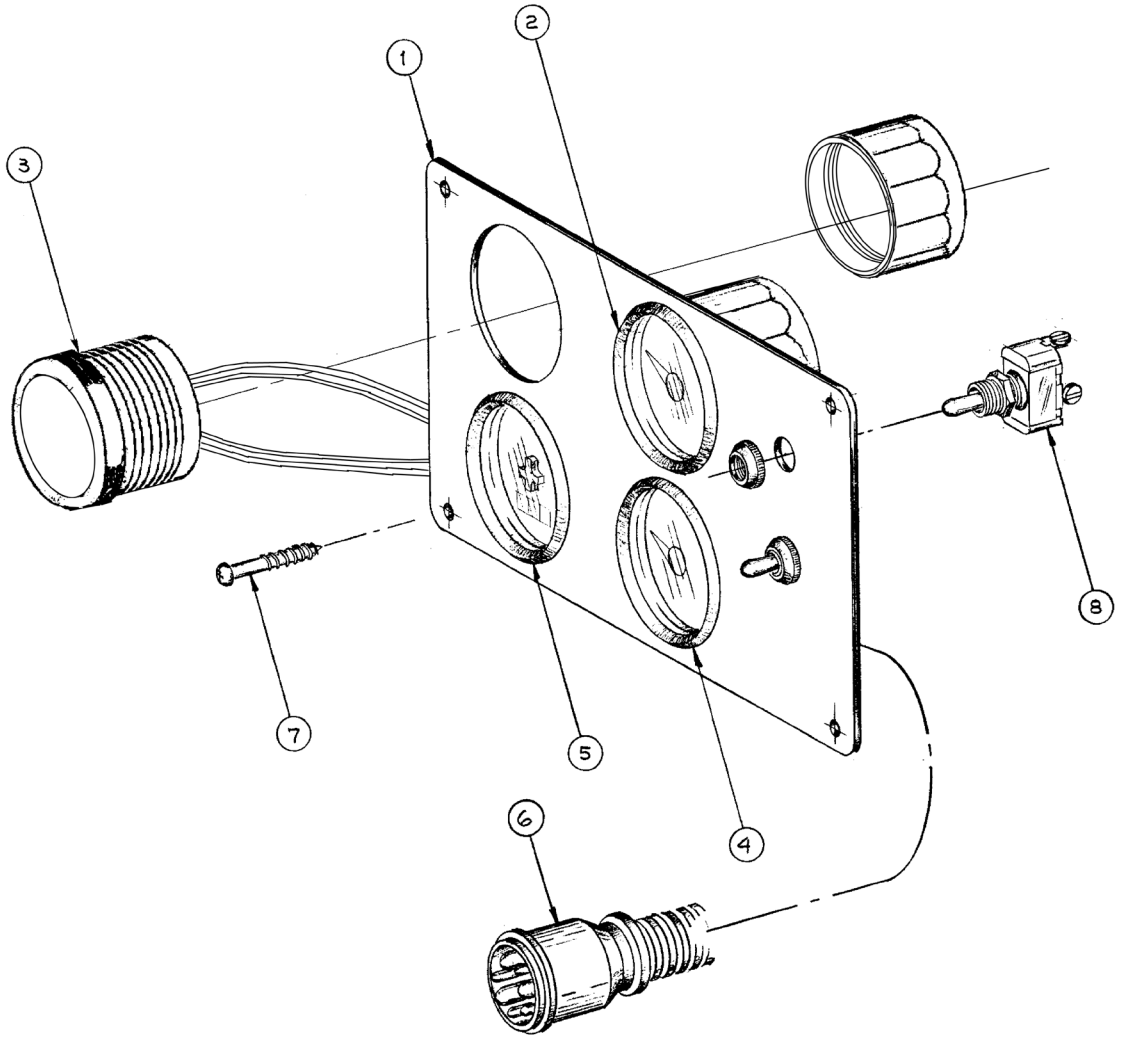

KEY	PART NUMBER	QTY	DESCRIPTION	SERIAL NUMBER
••	22-98708	1	S-3C Control Panel, 12 Volt (includes all keys)	-
••	22-98709	1	S-3C Control Panel, 24 Volt (includes all keys)	-
1	28-90010	1	Panel Plate	-
2	37-91076-1	1	Oil Pressure Gauge, 0-150 PSI 12 Volt & 24 Volt	-
3	37-90075-1	1	Temperature Gauge, 0- 250^{0}F 12 Volt & 24 Volt	-
4	37-91070-1	1	DC Voltmeter, 8 - 16 VDC	-
	37-91071-1	1	DC Voltmeter, 18- 32 VDC	-
5	37-91072-1	1	Hourmeter 12/ 24 Volt	-
6	22-42096	1	Panel Wire Harness	-
7	12-90007	4	Self Tapping Screw, Oval Head Phillips #6 x 3/4”	-
8	22-41051	2	Toggle Switch	-
9	00-00013	1	Label 12 Volt (not shown)	-
	00-00014	1	Label 24 Volt (not shown)	-

S-3C Control Panel 12 - 24 Volt B+ Systems

VDO Viewline Black Bezel Gauges

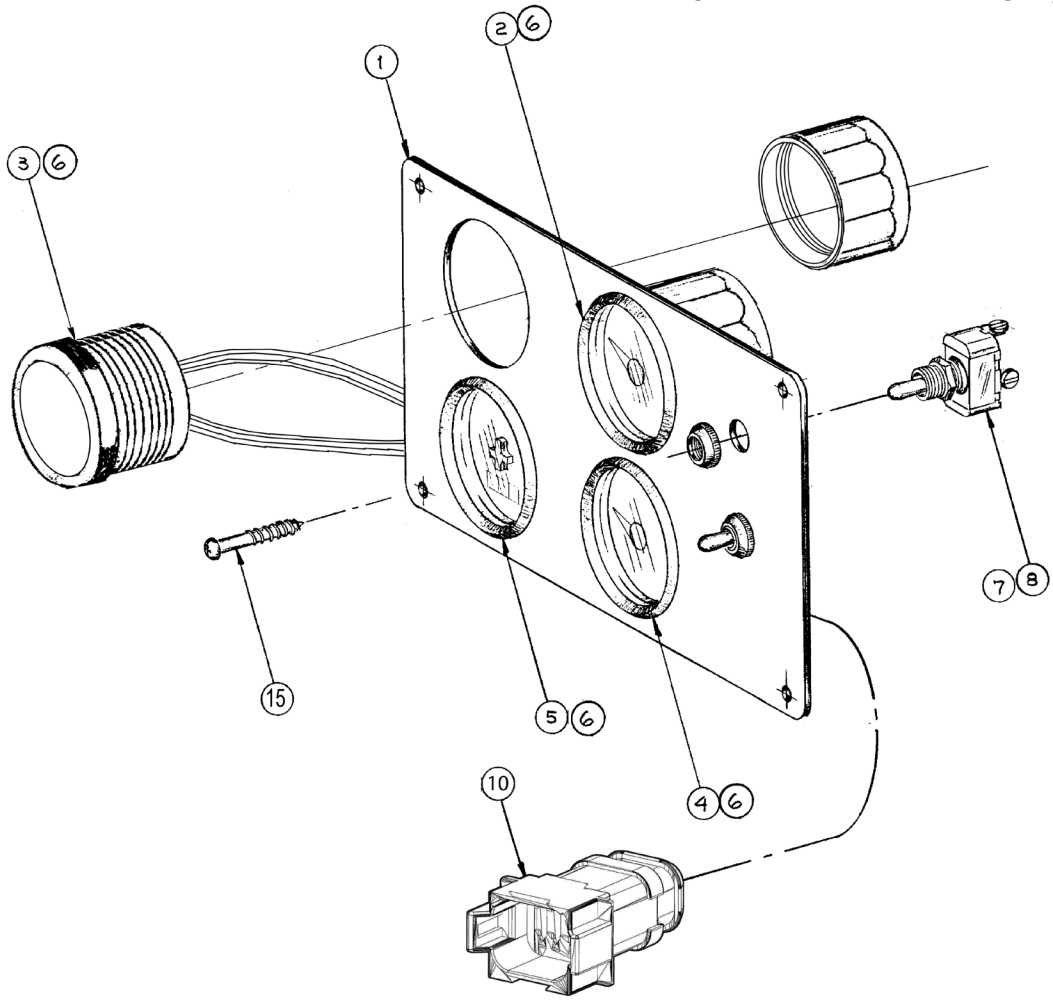

KEY	PART NUMBER	QTY	DESCRIPTION	SERIAL NUMBER
••	22-98731	1	S-3C Control Panel, 12 Volt (includes all keys)	-
••	22-98732	1	S-3C Control Panel, 24 Volt (includes all keys)	-
1	28-90010	1	Panel Plate	-
2	37-91076-1	1	Oil Pressure Gauge, 0-150 PSI 12/24 Volt *	-
3	37-91074-1	1	Temperature Gauge, 0- 250^{0}F 12/24 Volt *	-
4	37-91070-1	1	DC Voltmeter, 8 - 16 VDC *	-
	37-91071-1	1	Voltmeter 18 - 32 VDC *	
5	37-91072-1	1	Hourmeter 12/ 24 Volt *	-
6	37-00014	4	Bezel	-
8	22-41051	1	Toggle Switch	-
	22-40335	1	Toggle Switch	-
9	23-95601	1	Bracket, Relay Base Mounting	-
10	22-45606	1	Panel Wire Harness	-
11	12-00075	1	Machine Screw #8-32 x 1/4”	-
12	15-00035	1	Star Washer #8	-
13	22-42047	**	Relay 12 Volt	-
	22-40710	**	Relay 24 Volt	-
14	00-00013	**	Label 12 Volt (not shown)	-
	00-00014	**	Label 24 Volt (not shown)	-
15	12-90007	4	Self Tapping Screw, Oval Head Phillips #6 x 3/4”	-
			** As Required	

S-3B Control Panel 12 Volt & 24 Volt

Standard Line Black Bevel Gauges

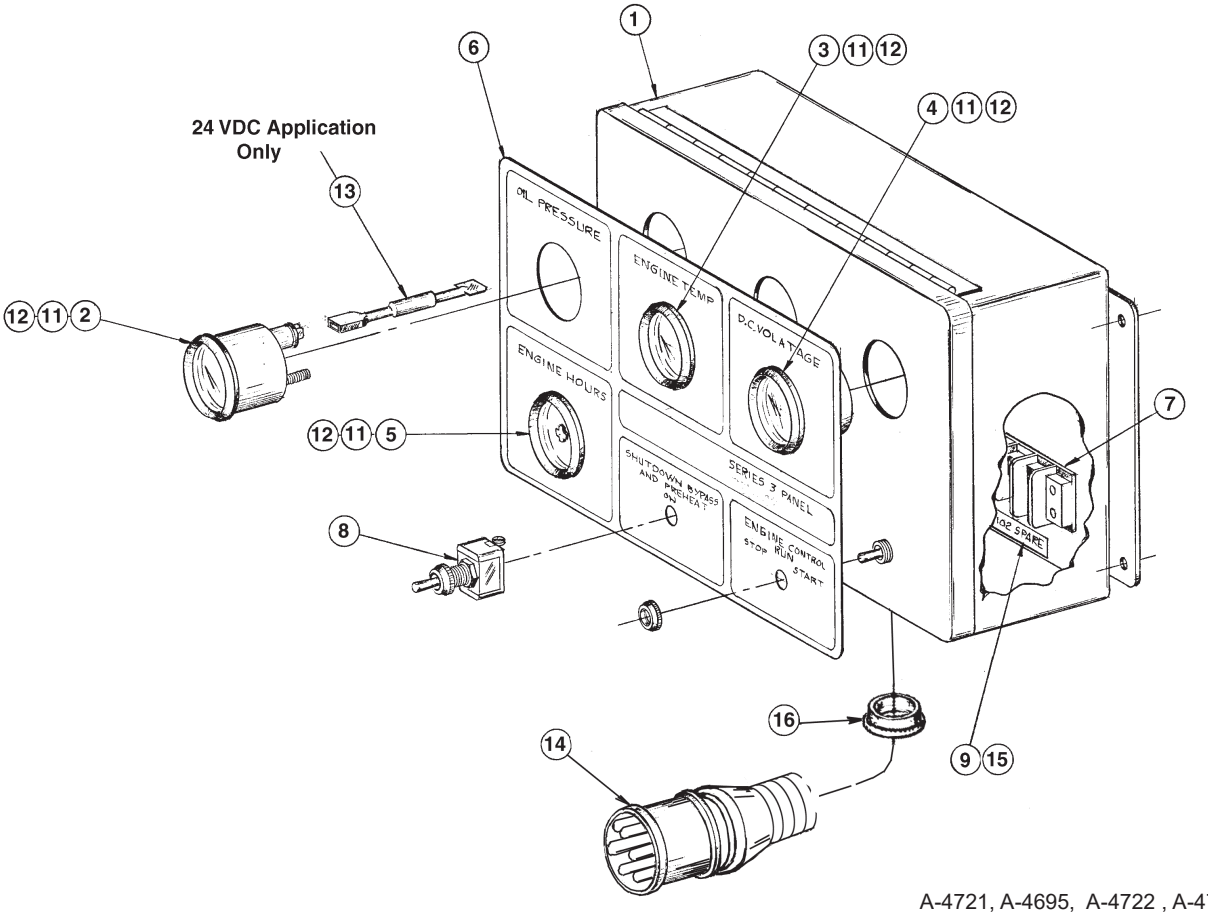

A-4721, A-4695, A-4722 , A-4723 / C-2470

KEY	PART NUMBER	QTY	DESCRIPTION	SERIAL NUMBER
••	22-98703	1	S-3B Control Panel, 12 Volt	-
••	22-98704	1	S-3B Control Panel, 24 Volt	-
1	39-40027	1	Enclosure	-
	39-41003	1	Back Panel	
2	37-40015	1	Oil Pressure Gauge 0 - 80 PSI	-
3	37-40011	1	Engine Temperature Gauge 0° - 250°F	-
4	37-40012	1	DC Voltmeter, 12 Volt	-
	37-40014	1	DC Voltmeter, 24 Volt	-
5	37-40020	1	Hourmeter, Standard Line	-
6	00-91018	1	Series 3 Control Panel Decal	-
7	22-41077	1	Terminal Board	-
8	22-41051	2	Switch	-
9	22-00052	1	Number Strip	-
10	22-40257	1	Wire Harness (not shown)	-
11	16-01001	4	O-ring	-
12	37-44852	**	12 Volt Bulb	-
	22-44853	**	24 Volt Bulb	-
13	22-40004	1	Resistor Kit (24 Volt only)	-
14	22-40062	1	Connection Harness	-
15	14-00019	2	Hex Nut, XL #6-32 x 1/2"	-
16	00-40028	1	Grommet	-
			**As required	

S-3B Control Panel 12 & 24 Volt

VDO Ocean Line Black Bezel Gauges

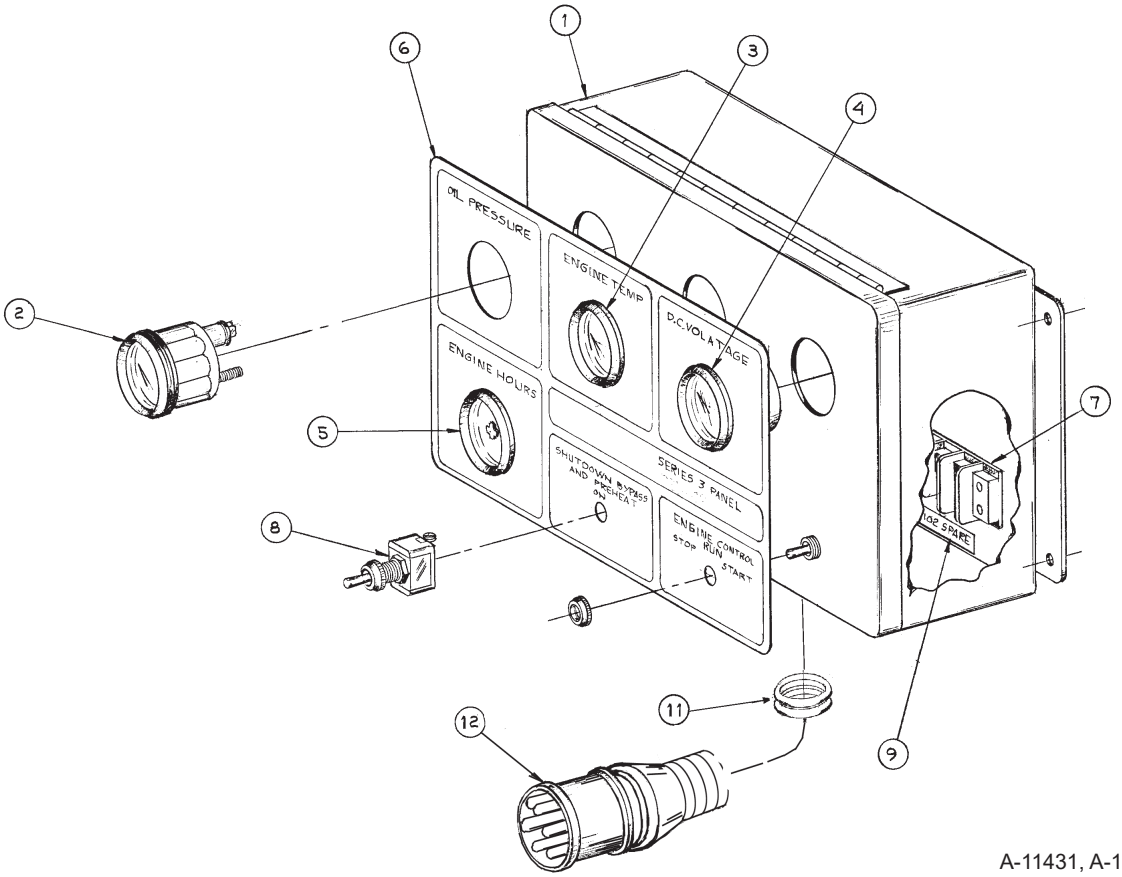

A-11431, A-11432, C-2470

KEY	PART NUMBER	QTY	DESCRIPTION	SERIAL NUMBER
••	22-98703	1	S-3C Control Panel, 12 Volt (includes all keys)	-
••	22-98704	1	S-3C Control Panel, 24 Volt (includes all keys)	-
1	39-40027	1	Enclosure	-
	39-41003	1	Back Panel	-
2	37-91071-1	1	Oil Pressure Gauge, 0-150 PSI 12 Volt	-
	37-91080-1	1	Oil Pressure Gauge, 0-150 PSI 24 Volt	-
3	37-90075-1	1	Temperature Gauge, 0- 250^{0}F 12 Volt	-
	37-90076-1	1	Temperature Gauge, 0- 250^{0}F 24 Volt	-
4	37-90072-1	1	DC Voltmeter, 8 - 16 VDC	-
	37-90073-1	1	DC Voltmeter, 18- 32 VDC	-
5	37-90074-1	1	Hourmeter 12/ 24 Volt	-
6	00-91018	1	Panel Decal	-
7	22-41077	1	Terminal Strip	-
8	22-41051	2	Toggle Switch	-
9	22-00052	1	Number Strip	-
10	22-40257	1	Wire Harness (not shown)	-
11	00-40028	1	Grommet	-
12	22-42027	1	Connection Harness	-
13	00-00013	1	Label 12 Volt (not shown)	-
	00-00014	1	Label 24 Volt (not shown)	-
14	37-41004	**	12 Volt Bulb (not shown)	-
	37-41003	**	24 Volt Bulb (not shown)	

**As required

S-3B Control Panel 12 & 24 Volt

VDO Viewline Black Bezel Gauges

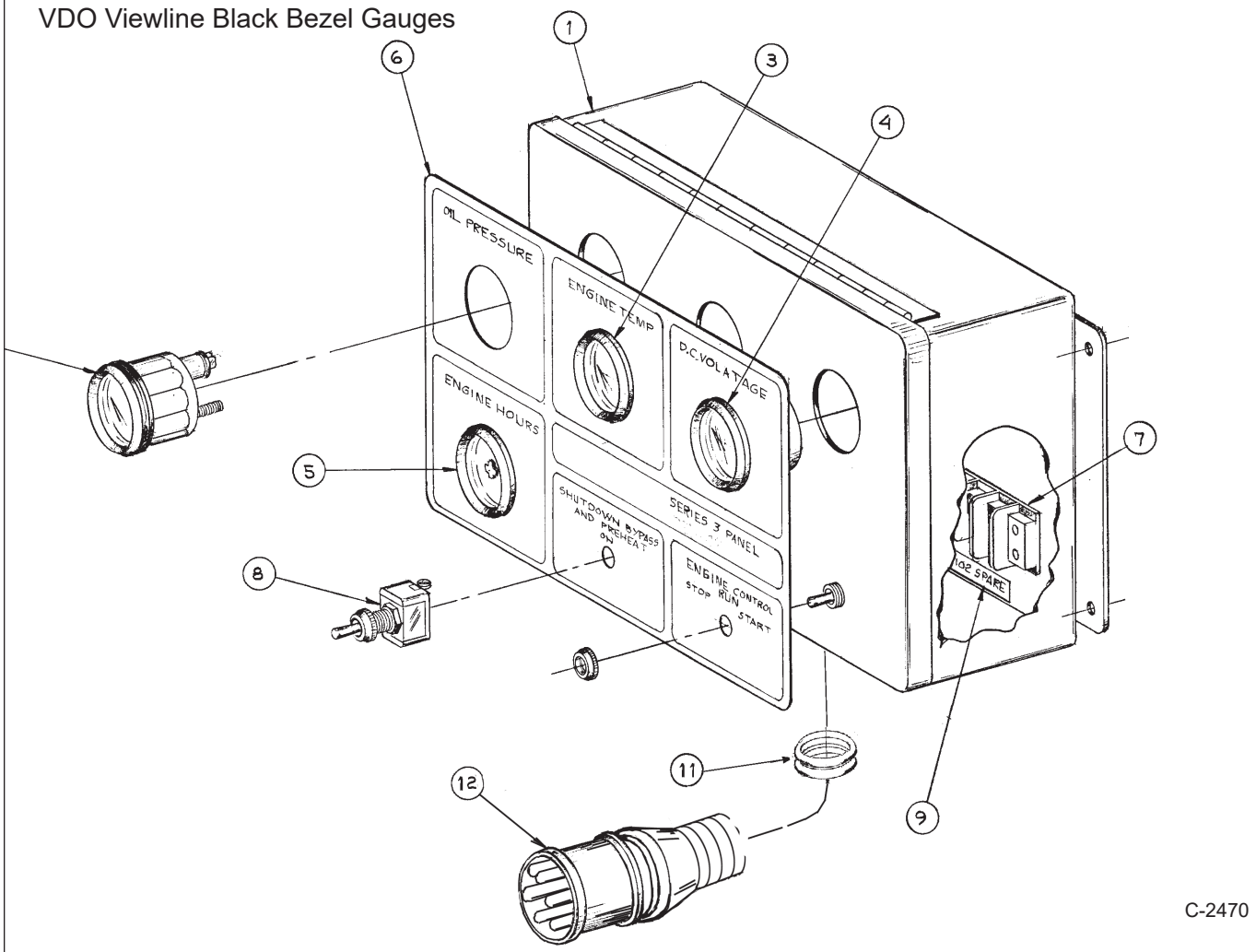

KEY	PART NUMBER	QTY	DESCRIPTION	SERIAL NUMBER
••	22-98703	1	S-3C Control Panel, 12 Volt (includes all keys)	-
••	22-98704	1	S-3C Control Panel, 24 Volt (includes all keys)	-
1	39-40027	1	Enclosure	-
2	37-91076-1	1	Oil Pressure Gauge, 0-150 PSI 12 Volt & 24 Volt	-
3	37-91074-1	1	Temperature Gauge, 0- 250^{0}F 12 Volt & 24 Volt	-
4	37-91070-1	1	DC Voltmeter, 8 - 16 VDC	-
	37-91071-1	1	DC Voltmeter, 18- 32 VDC	-
5	37-91072-1	1	Hourmeter 12/ 24 Volt	-
6	00-91018	1	Panel Decal	-
7	22-41077	1	Terminal Strip	-
8	22-41051	2	Toggle Switch	-
9	22-00052	1	Number Strip	-
10	22-40648	1	Wire Harness (not shown)	-
11	00-40028	1	Grommet	-
12	22-42027	1	Connection Harness	-
13	00-00013	1	Label 12 Volt (not shown)	-
	00-00014	1	Label 24 Volt (not shown)	-
14	37-41004	**	12 Volt Bulb (not shown)	-
	37-41003	**	24 Volt Bulb (not shown)	
			**As required	

Notes

S-3B Control Panel 12 - 24 Volt B+ Systems

VDO Viewline Black Bezel Gauges

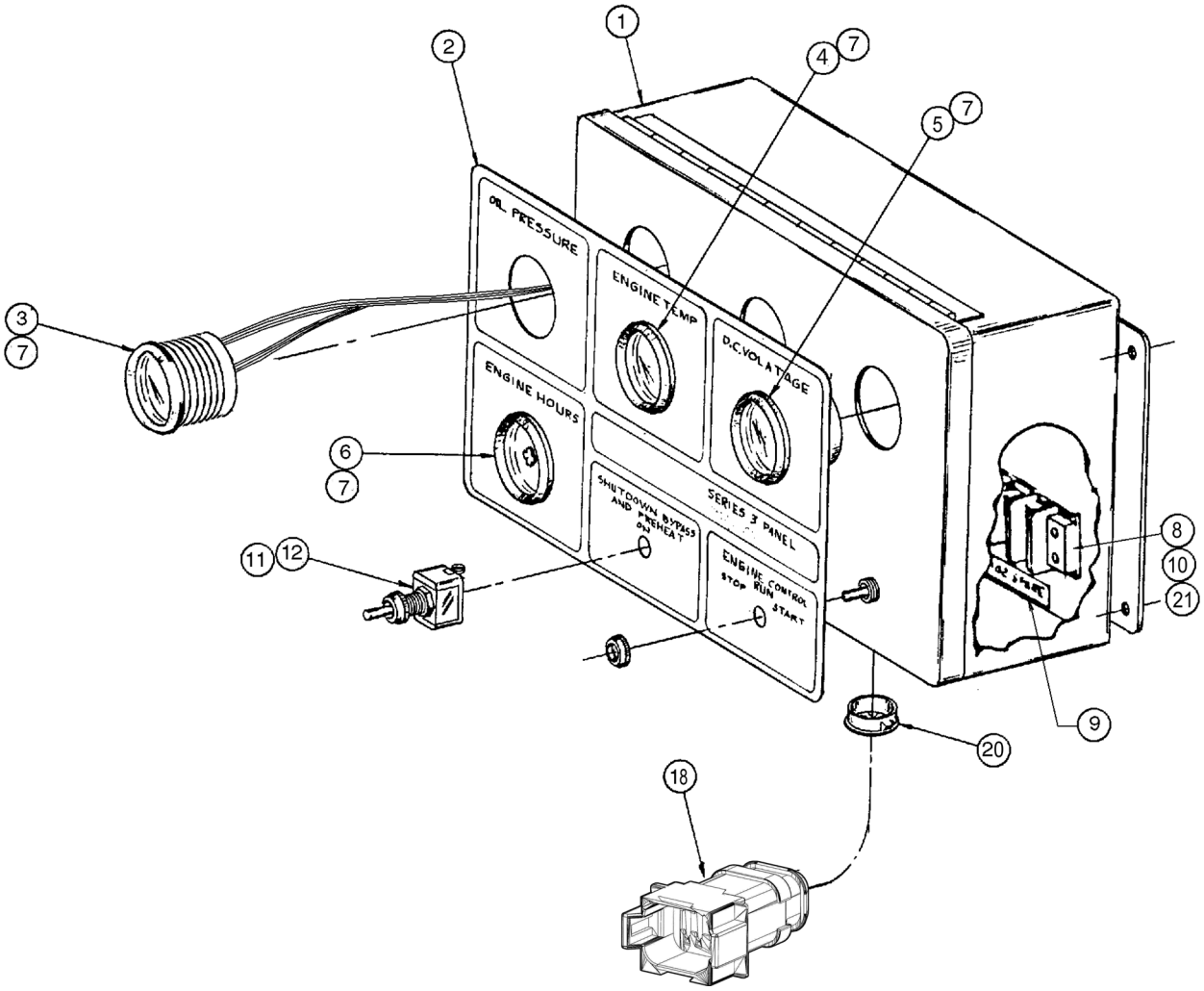

S-3B Control Panel 12 - 24 Volt B+ Systems

VDO Viewline Black Bezel Gauges

KEY	PART NUMBER	QTY	DESCRIPTION	SERIAL NUMBER
••	22-98717	1	S-3C Control Panel, 12 Volt (includes all keys)	-
••	22-98718	1	S-3C Control Panel, 24 Volt (includes all keys)	-
1	39-40027	1	Enclosure	-
2	00-91018	1	Decal	-
3	37-91076-1	1	Oil Pressure Gauge, 0-150 PSI 12/24 Volt *	-
4	37-91074-1	1	Temperature Gauge, 0- 250^{0}F 12/24 Volt *	-
5	37-91070-1	1	Voltmeter, 8 - 16 VDC *	-
	37-91071-1	1	Voltmeter 18 - 32 VDC *	
6	37-91072-1	1	Hourmeter 12/ 24 Volt	-
7	37-00014	4	Bezel	-
8	22-41077	1	Terminal Strip	-
9	22-00052	1	Number Strip	-
10	14-09021	2	Jam Nut, Nylock #8-32 S/S	-
11	22-41051	2	Toggle Switch	-
12	22-40335	1	Toggle Switch	-
13	23-95602	1	Bracket, Relay Mounting	-
14	22-45604	1	Wire Harness (not shown) (Includes keys 22-23)	-
15	12-00006	1	Machine Screw, Phillips #8-32 x 1/2” S/S	-
16	15-00035	1	Star Washer #8 S/S	-
17	22-42047	**	Relay 12 Volt	-
	22-40710	**	Relay 24 Volt	-
18	22-42027	1	Connection Harness	-
19	00-00013	1	Label 12 Volt (not shown)	-
	00-00014	1	Label 24 Volt (not shown)	-
20	00-40028	1	Grommet	-
21	12-42103	2	Machine Screw, Pan Head, Phillips #8-32 x 5/8” S/S	-
22	22-40931	1	Relay Base	-
23	22-40393	1	Retainer	-

* Note Bezel 37-00014 supplied separately

Belt Guard & Mounting

Small & Medium Frame Alternators, Units without PTO

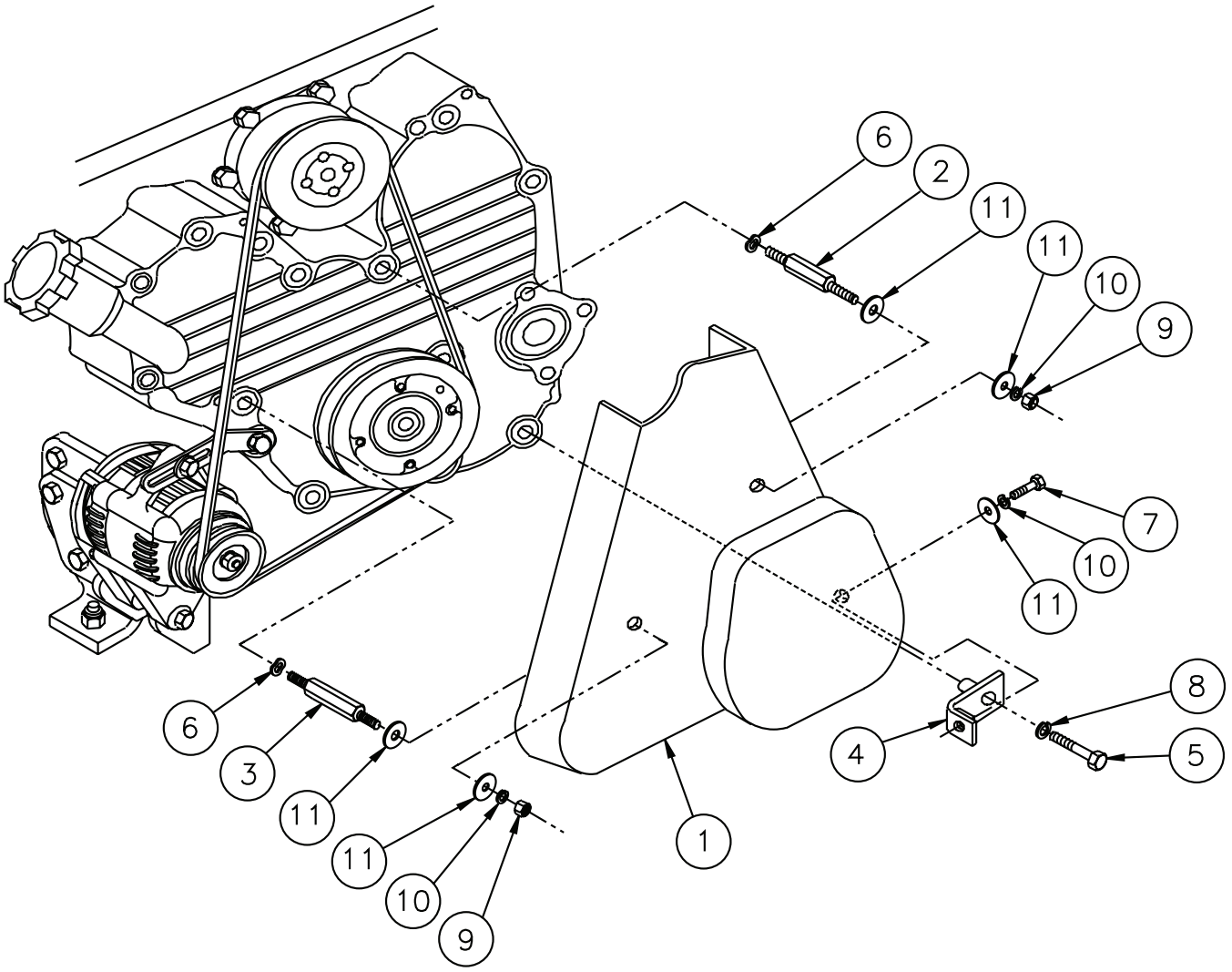

A-9655, A-9656, A-9659, A-9660 / C-5041

KEY	PART NUMBER	QTY	DESCRIPTION	SERIAL NUMBER
1	00-08702	1	Belt Guard, Small Frame Alternator, Heat Exchanged units	-
	00-09701	1	Belt Guard, Small Frame Alternator, Keel Cooled units	-
	00-08704	1	Belt Guard, Medium Frame Alternator, Heat Exchanged units } up to S/N	xxxx-47987C
	00-08708	1	Belt Guard, Medium Frame Alternator, Keel Cooled units } up to S/N	xxxx-47987C
2	13-09701	1	Stud, Belt Guard Mtg. (Special)	-
3	13-09702	1	Stud, Belt Guard Mtg. (Special)	-
4	23-08701	1	Bracket, Lower Belt Guard Mtg.	-
5	12-00708	3	Capscrew, Hex Head, M8 x 1.25 x 45 mm	-
6	15-00707	2	Wave Washer M8	-
7	12-00776	1	Capscrew, Hex Head, M8 x 1.25 x 20 mm S/S	-
8	15-00702	1	Lock Washer, M8	-
9	14-09711	2	Hex Nut, M8 x 1.25 S/S	-
10	15-00705	3	Lock Washer, M8 S/S	-
11	15-70004	5	Snubbing Washer S/S	-

Belt Guard & Mounting

Small & Medium Frame Alternators, Keel Cooled Units with PTO

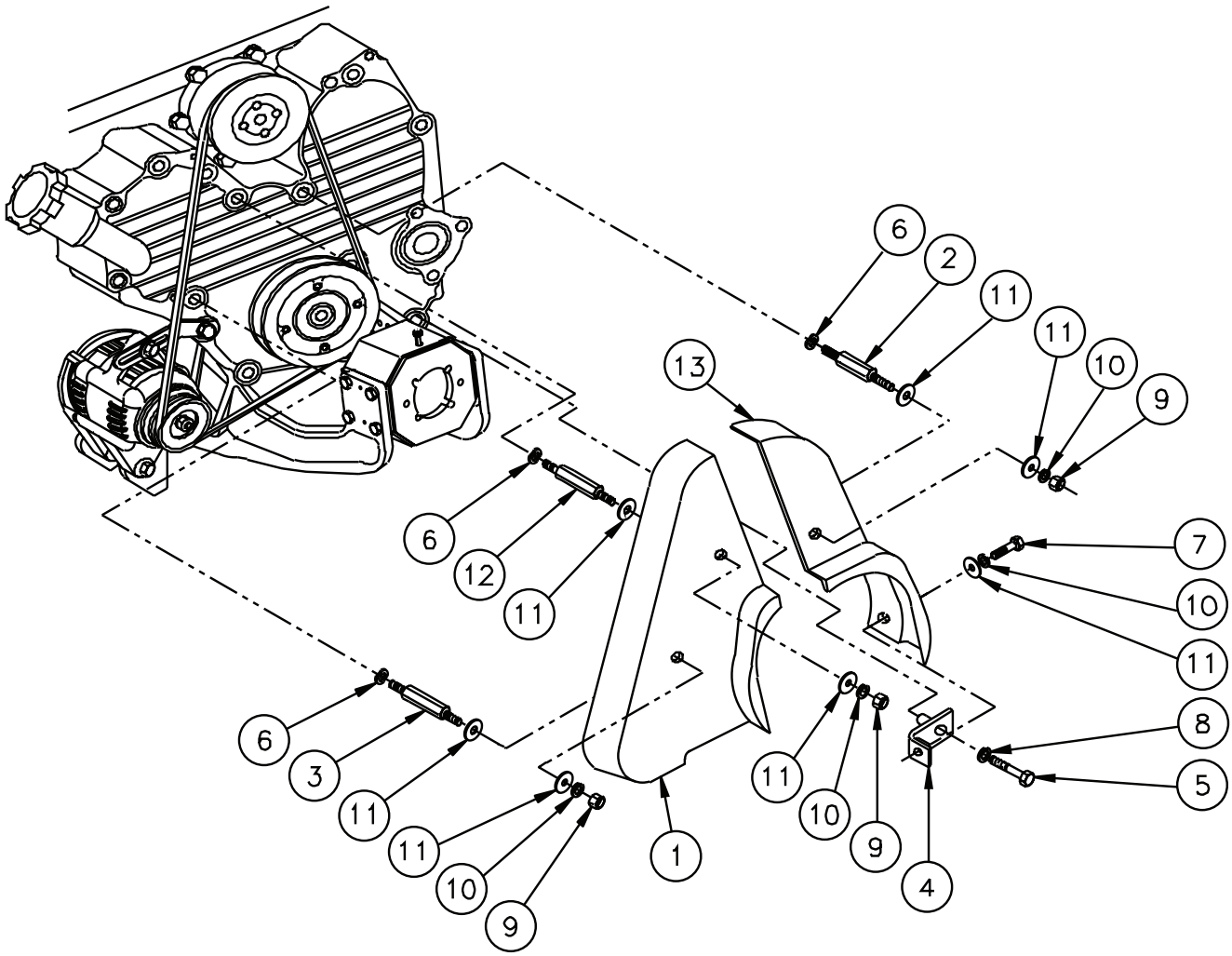

A-9657, A-9662 / C-5088

KEY	PART NUMBER	QTY	DESCRIPTION		SERIAL NUMBER
1	00-08707	1	Belt Guard, Small Frame Alternator (Right 1/2)		-
	00-08709	1	Belt Guard, Medium Frame Alternator (Right 1/2)	up to S/N	xxxx-47987C
2	13-09701	1	Stud, Belt Guard Mtg. (Special)		-
3	13-09702	1	Stud, Belt Guard Mtg. (Special)		-
4	23-08701	1	Bracket, Lower Belt Guard Mtg.		-
5	12-00708	1	Capscrew, Hex Head, M8 x 1.25 x 45 mm		-
6	15-00707	3	Wave Washer M8		-
7	12-00776	1	Capscrew, Hex Head, M8 x 1.25 x 20 mm S/S		-
8	15-00702	1	Lock Washer, M8		-
9	14-09711	3	Hex Nut, M8 x 1.25 S/S		-
10	15-00705	4	Lock Washer, M8 S/S		-
11	15-70004	7	Snubbing Washer S/S		-
12	13-09703	1	Stud, Belt Guard Mtg. (Special)		-
13	00-08712	1	Belt Guard, Small & Medium Frame Alternator (Left 1/2)		-

Belt Guard & Mounting

Small & Medium Frame Alternators, Heat Exchanged Units with PTO

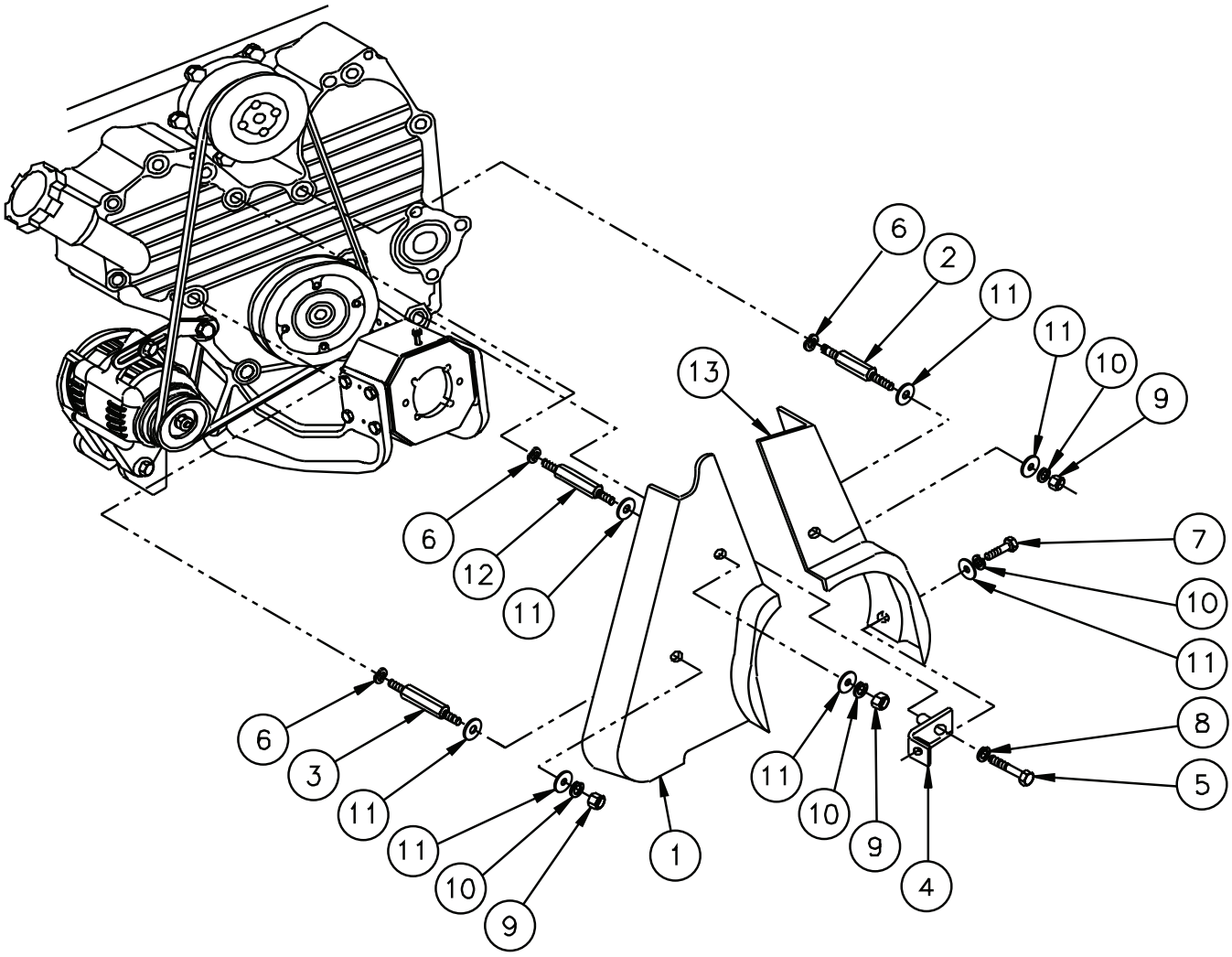

A-9658, A-9661 / C-5086

KEY	PART NUMBER	QTY	DESCRIPTION	SERIAL NUMBER
1	00-08703	1	Belt Guard, Small Frame Alternator (Right 1/2)	-
	00-08705	1	Belt Guard, Medium Frame Alternator (Right 1/2) up to S/N	xxxx-47987C
2	13-09701	1	Stud, Belt Guard Mtg. (Special)	-
3	13-09702	1	Stud, Belt Guard Mtg. (Special)	-
4	23-08701	1	Bracket, Lower Belt Guard Mtg.	-
5	12-00708	1	Capscrew, Hex Head, M8 x 1.25 x 45 mm	-
6	15-00707	3	Wave Washer M8	-
7	12-00776	1	Capscrew, Hex Head, M8 x 1.25 x 20 mm S/S	-
8	15-00702	1	Lock Washer, M8	-
9	14-09711	3	Hex Nut, M8 x 1.25 S/S	-
10	15-00705	4	Lock Washer, M8 S/S	-
11	15-70004	7	Snubbing Washer S/S	-
12	13-09703	1	Stud, Belt Guard Mtg. (Special)	-
13	00-08713	1	Belt Guard, Small & Medium Frame Alternator (Left 1/2)	-

Notes

Overhaul Gasket Set

KEY	PART NUMBER	QTY	DESCRIPTION	SERIAL NUMBER
••	29-08700		Gasket Set, Engine Overhaul (includes all keys)	-
1	04111-20322-71	1	Gasket Kit - Engine Overhaul (components not listed)	-
2	11-75401	1	Gasket, Hydraulic Pump Drive Cover	-
3	11-28701	1	Gasket, Air Filter Housing Mtg.	-
4	11-34501	1	Gasket, Exhaust Elbow Mtg.	-
5	11-10015	1	Thermostat Seal Ring	-
6	11-18701	1	Gasket, Thermostat Housing Mtg.	-
7	16-15401	1	O-ring	-
8	11-12203	2	Gasket, KC Adapter & HE Mtg.	-
9	20-12012	2	Gasket, Rubber 3"	-
10	11176-72006-71	4	Seat, Fuel Injector	-
11	11177-76007-71	4	Gasket, Fuel Injector	-
12	80301-76075-71	1	O-ring, Injection Pump Mtg.	-
13	23654-76001-71	4	Sealing Washer, Return Line	-
14	07005-01412	8	Sealing Washer, Bonded	-

Engine Lifting Brackets

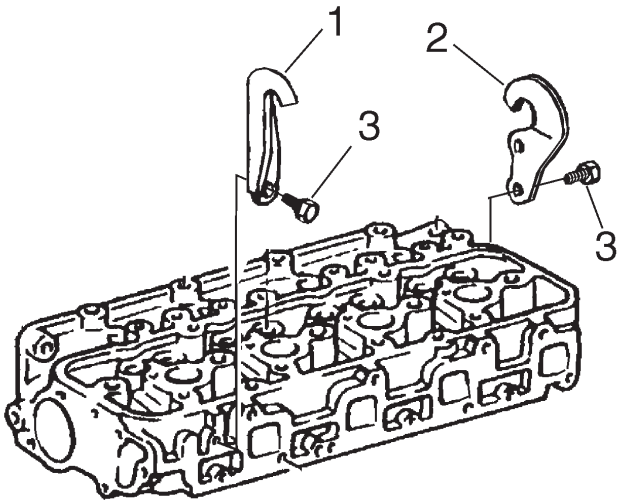

P864Liftingbrackets

KEY	PART NUMBER	QTY	DESCRIPTION	SERIAL NUMBER
1	12281-78200-71	1	Front Lifting Bracket	-
2	12281-78201-71	1	Rear Lifting Bracket	-
3	91622-61018	4	Capscrew, Hex Head Flanged M10 x 1.25 x 18 mm	-

Base Frame

Up to S/N xxxx-47987C

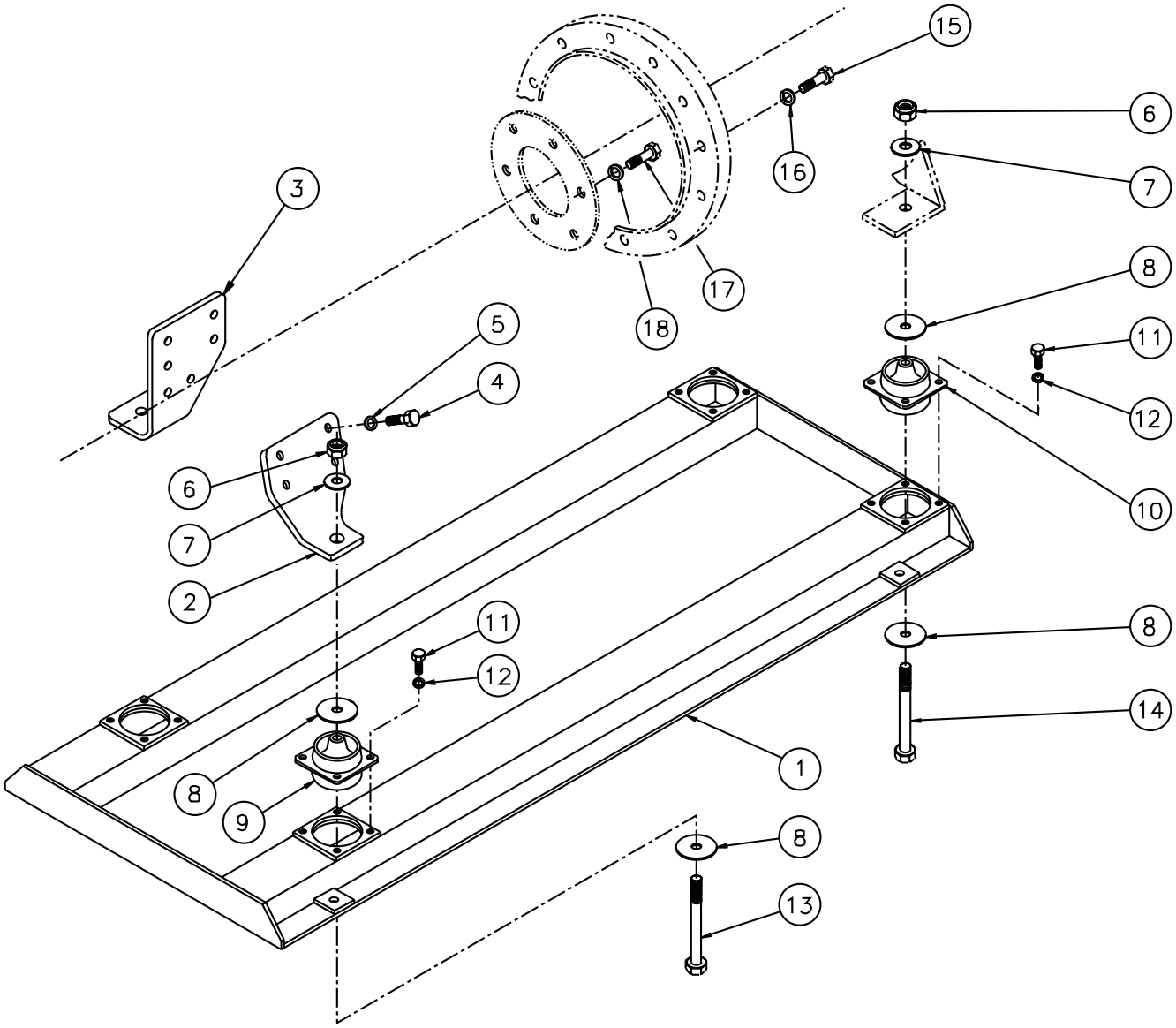

A-9514 / D-3519

Base Frame

Up to S/N xxxx-47987C

KEY	PART NUMBER	QTY	DESCRIPTION	SERIAL NUMBER
1	39-88701	1	Base Frame, Steel	-
	39-88702	1	Base Frame, Aluminum	-
2	23-88702	1	Front Engine Mounting Bracket, Left Hand	-
3	23-88701	1	Front Engine Mounting Bracket, Right Hand	-
4	12-00809	6	Capscrew, Hex Head M10 x 1.25 x 25 mm	-
5	15-00802	8	Lock Washer	-
6	14-09830	4	Hex Nut, Nylock M12 x 1.75 S/S	-
7	15-09007	4	Flat Washer, M12 S/S	-
8	15-00040	8	Snubbing Washer	-
9	33-83106	2	Plateform Mount, 310 lb.	-
10	33-82205	2	Plateform Mount, 250 lb.	-
11	12-00776	16	Capscrew, Hex Head M8 x 1.25 x 20 mm S/S	-
12	15-00705	16	Lock Washer, M8 S/S	-
13	12-09924	2	Capscrew, Hex Head M12 x 1.75 x 100 mm S/S	-
14	12-09922	2	Capscrew, Hex Head M12 x 1.75 x 90 mm S/S	-
15	12-00831	12	Capscrew, Hex Head M10 x 1.5 x 25 mm	-
16	15-00802	12	Lock Washer, M10	-
17	12-00313	8	Capscrew, Hex Head 3/8-16 x 1-1/4"	-
18	15-00302	8	Lock Washer, 3/8	-

Base Frame

from S/N xxxx-47988C

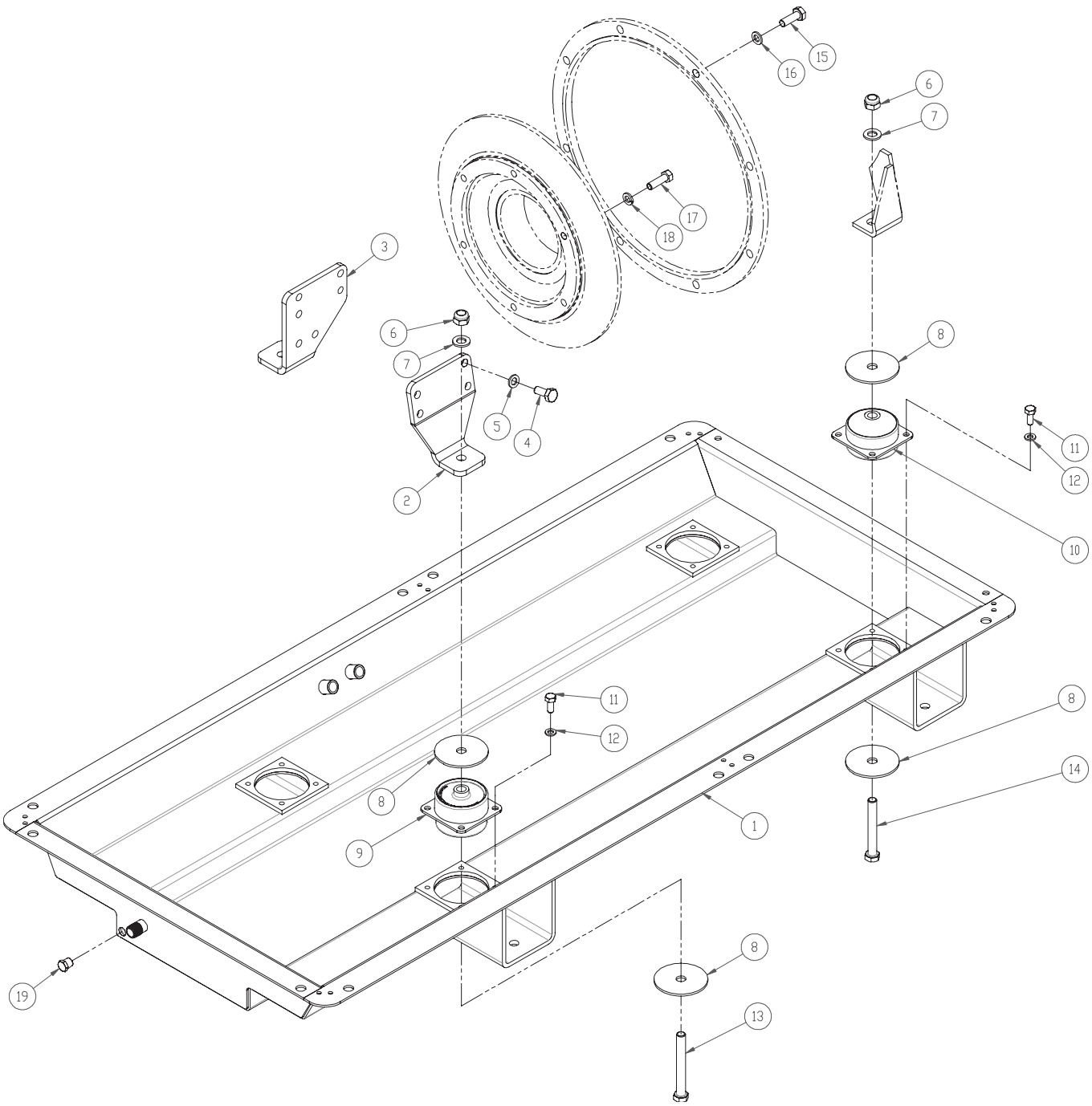

C-6939

Base Frame

from S/N xxxx-47988C

KEY	PART NUMBER	QTY	DESCRIPTION	SERIAL NUMBER
1	39-88703	1	Steel Base Pan, Plateform Mounts	-
2	23-88702	1	Mounting Bracket, LH	-
3	23-88701	1	Mounting Bracket, RH	-
4	12-09809	6	Capscrew, Hex Head M10 x 1.25 x 25 mm S/S	-
5	15-00808	8	Lock Washer, Helical M10 S/S	-
6	14-09830	4	Hex Nut, Nylock M12 x 1.75 S/S	-
7	15-09007	4	Flat Washer M12 S/S	-
8	15-00040	8	Snubbing Washer	-
9	33-83106	2	Plateform Mount, 310 lb. (without PTO)	-
	33-85406	2	Plateform Mount, 400 lb. (with PTO)	-
10	33-82205	2	Plateform Mount, 250 lb. (without PTO)	-
	33-85402	2	Plateform Mount, 220 lb. (with PTO)	
11	12-09751	16	Capscrew, Hex Head M8 x 1.25 x 16 mm S/S	-
12	15-00705	16	Lock Washer, Helical M8 S/S	-
13	12-09924	2	Capscrew, Hex Head M12 x 1.75 x 100 mm S/S	-
14	12-09922	2	Capscrew, Hex Head M12 x 1.75 x 90 mm S/S	-
15	12-00832	12	Capscrew, Hex Head M10 x 1.5 x 30 mm	-
16	15-00802	12	Lock Washer M10	-
17	12-00313	8	Capscrew, Hex Head 3/8-16 x 1-1/4”	-
18	15-00302	8	Lock Washer 3/8”	-
19	21-31624	1	Plug, Hex Head Brass 1/4 NPT	-

Base Frame

Steel base pan w/Plateform Mounts
PX-325K2 GEM Series

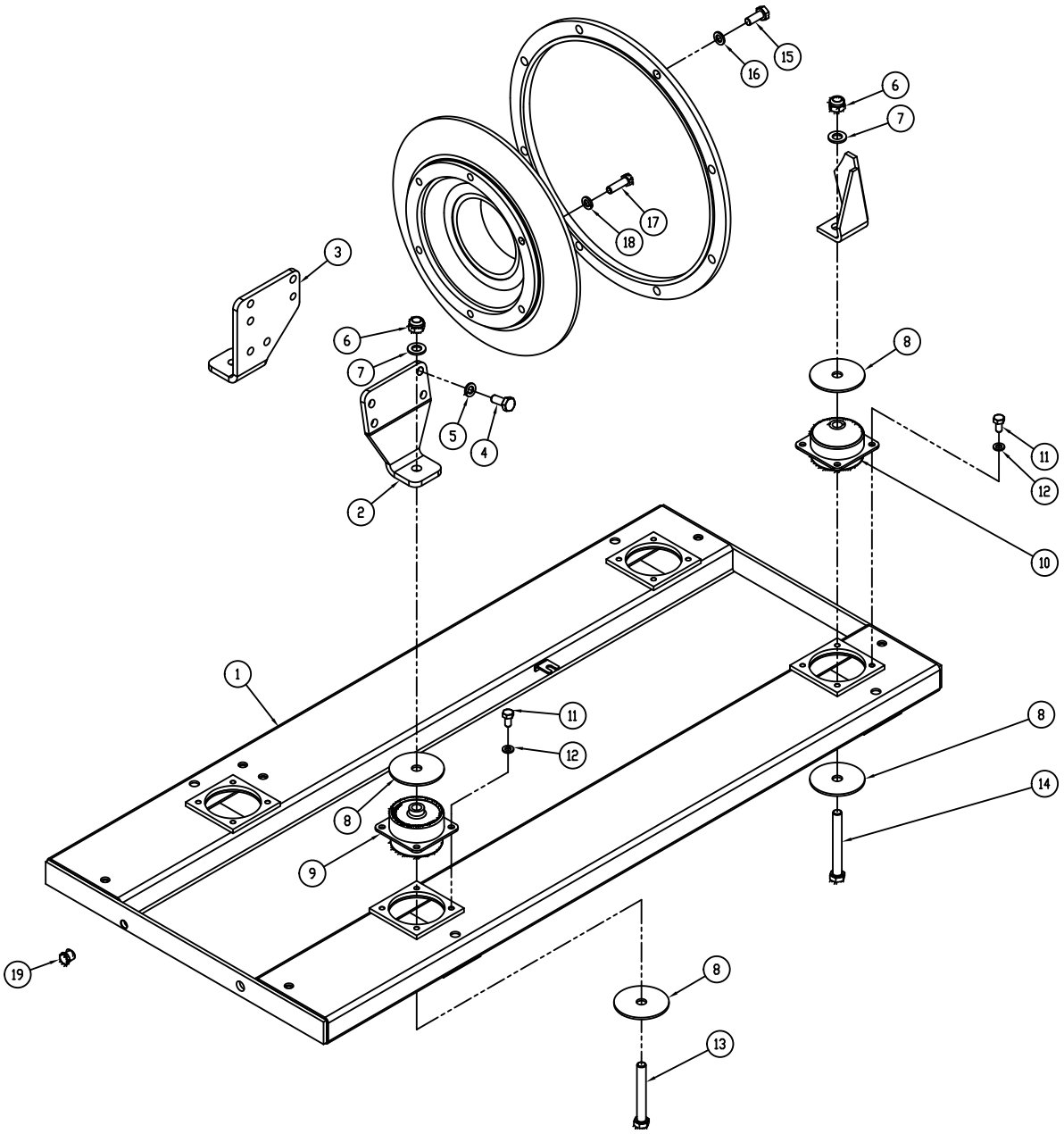

C-7430

Base Frame

KEY	PART NUMBER	QTY	DESCRIPTION	SERIAL NUMBER
1	39-88706	1	Base frame, GEM Series M864W	-
2	23-88702	1	Bracket, Front Engine Mtg. LH	-
3	23-88701	1	Bracket, Front Engine Mtg. RH	-
4	12-09809	6	Capscrew, HX HD M10 x 1.25 x 25 mm S/S	-
5	15-00808	8	Lock Washer, Helical M10 S/S	-
6	14-09830	4	Hex Nut, Nylock M12 x 1.75 S/S	-
7	15-09007	4	Flat Washer M12 S/S	-
8	15-00040	8	Snubbing Washer S/S	-
9	33-83106	2	Mount, Plateform 310 LB	-
10	33-82205	2	Mount, Plateform 250 LB	-
11	12-09751	16	Capscrew, HX HD M8 x 1.25 x 16 mm S/S	-
12	15-00705	16	Lock Washer, Helical M8 S/S	-
13	12-09924	2	Capscrew, HX HD M12 x 1.75 x 100 mm S/S	-
14	12-09922	2	Capscrew, HX HD M12 x 1.75 x 90 mm S/S	-
15	12-00831	12	Capscrew, HX HD M10 x 1.5 x 25 mm	-
16	15-00802	12	Lock Washer, Helical M10	-
17	12-00313	8	Capscrew, HX HD 3/8-16 x 1-1/4”	-
18	15-00302	8	Lock Washer, Helical 3/8”	-
19	21-31624	1	Plug, HX HD Brass 1/4 NPT	-

P.T.O. Adapter

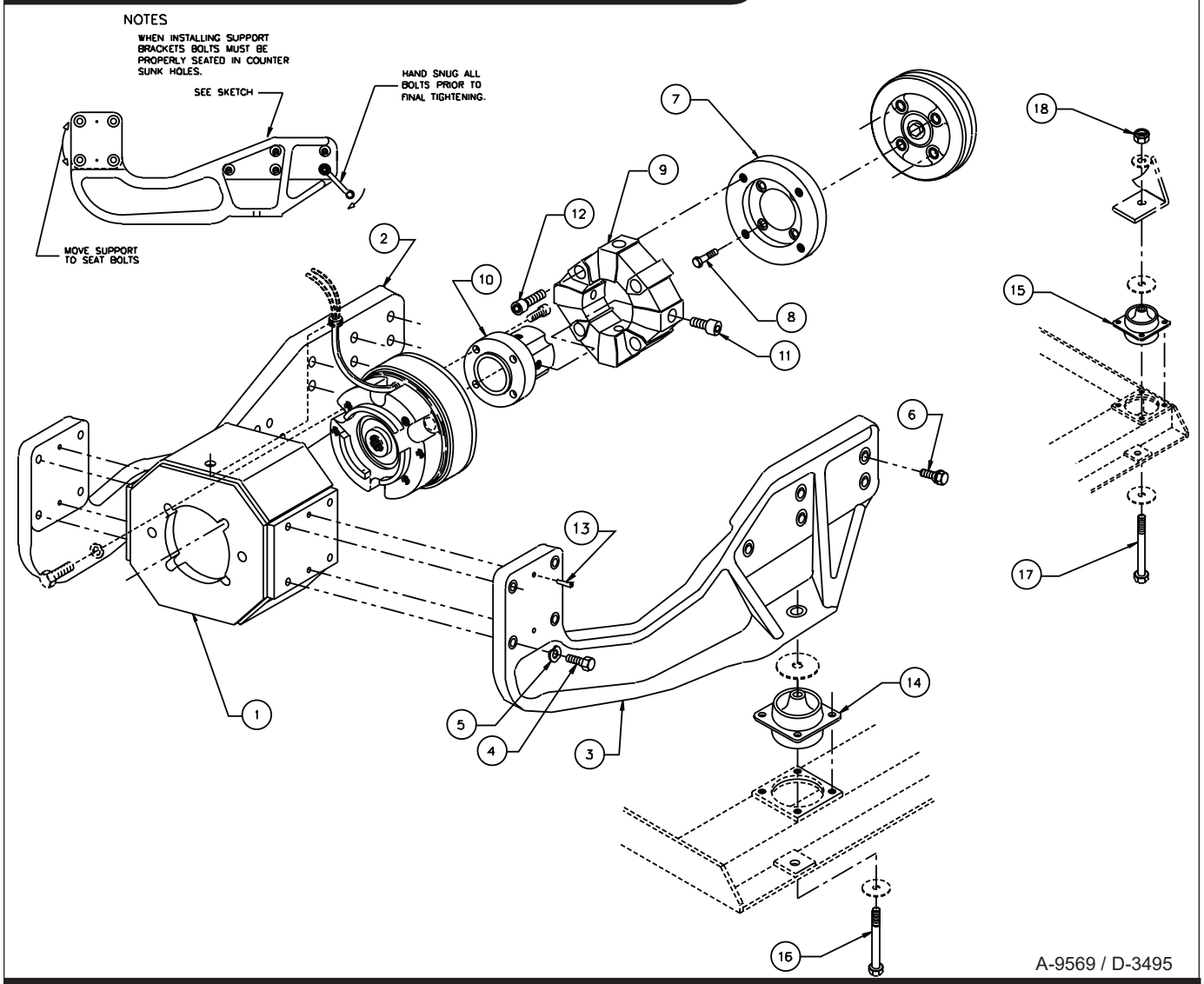

KEY	PART NUMBER	QTY	DESCRIPTION	SERIAL NUMBER
1	10-65401	1	PTO Clutch Housing	-
2	23-68701	1	Engine/PTO Support Bracket (Right Hand)	-
3	23-68702	1	Engine/PTO Support Bracket (Left Hand)	-
4	12-00831	8	Capscrew, Hex Head M10 x 1.5 x 25 mm	-
5	15-00804	8	Wave Washer, M10	-
6	12-65402	11	Capscrew (Special)	-
7	31-68701	1	PTO Drive Adapter	-
8	01435-00820	4	Capscrew, Hex Head Flanged M8 x 1.25 x 20 mm	-
9	34-65406	1	Coupling Assembly	-
10	34-65407	1	Hub	-
11	12-20920	4	Capscrew, Socket Head M12 x 1.75 x 40 mm	-
12	12-20914	4	Capscrew, Socket HD M12 x 1.75 x 35 mm	-
13	32-60001	4	Taper Pin #4 x 1"	-
14	33-85406	2	Plateform Mount, 400 lbs.	-
15	33-85402	2	Plateform Mount, 220 lbs.	-
16	12-09926	2	Capscrew, Hex Head M12 x 1.75 x 110 mm S/S	-
17	12-09967	2	Capscrew, Hex Head M12 x 1.75 x 80 mm S/S	-
18	14-09830	4	Hex Nut, Nylock M12 x 1.75 S/S	-

Electric Clutch

12 Volt and 24 Volt B-Spline

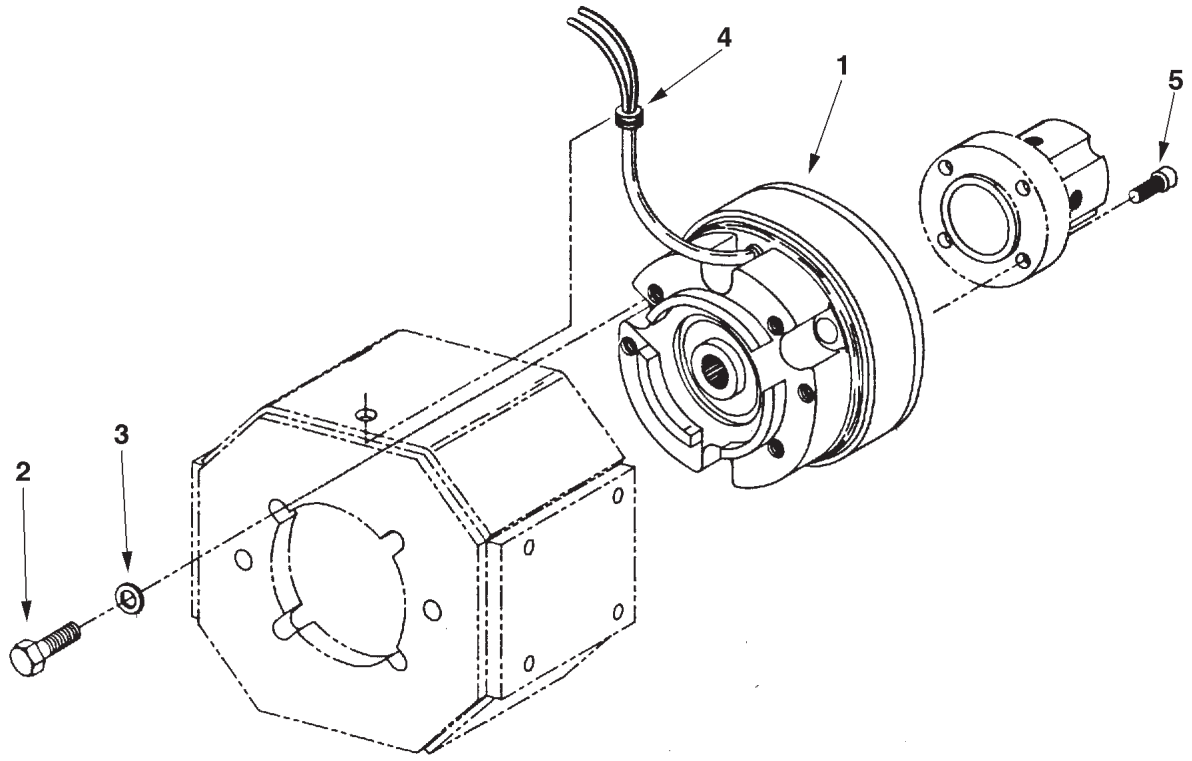

A-6291 + A-6346 / C-3020

KEY	PART NUMBER	QTY	DESCRIPTION	SERIAL NUMBER
1	34-60091	1	Electric Clutch Assembly (12 volt) Model H-28	-
	34-60092	1	Electric Clutch Assembly (24 volt) Model H-28	-
	34-60091	1	Electric Clutch Assembly (12 Volt) Model MMC-28	-
	34-60092	1	Electric Clutch Assembly (24 Volt) Model MMC-28	
2	12-00513	4	Capscrew, Hex Head 1/2-13 x 1-1/4	-
3	15-00007	4	Flat Washer M12	-
4	00-61003	1	Grommet	-
5	12-63800	4	Capscrew, Socket Head 3/8-24 x 3/4	-

Oil Level Switch/Gauge

up to S/N xxxx-47987C

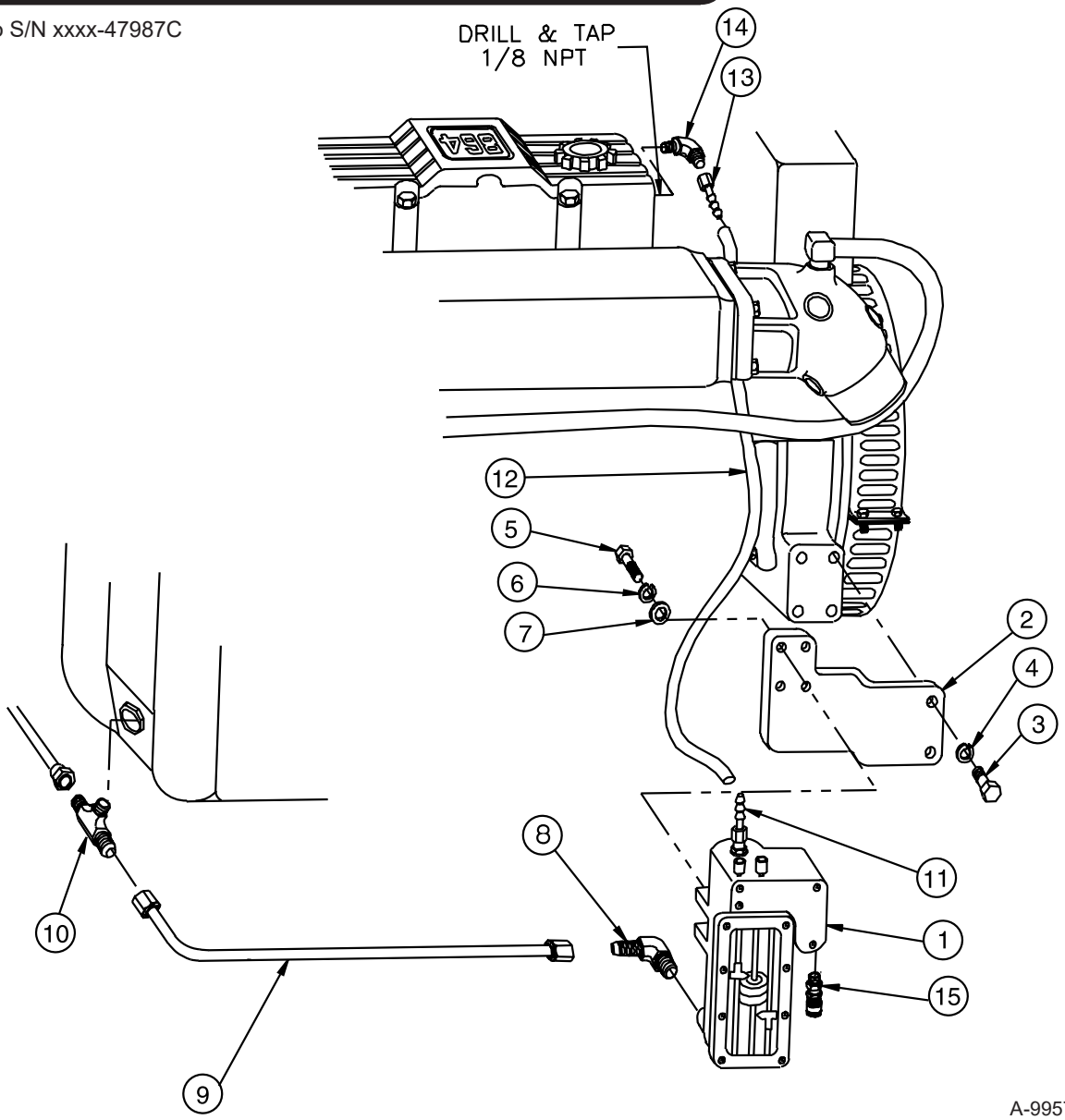

A-9957 / C-5187

KEY	PART NUMBER	QTY	DESCRIPTION	SERIAL NUMBER
1	22-10004	1	Oil Level Switch Gauge, Isolated Ground	-
2	23-78702	1	Bracket	-
3	12-00912	2	Capscrew, Hex Head M12 x 1.75 x 25 mm	-
4	15-00912	2	Lock Washer, Helical M12	-
5	12-00111	4	Capscrew, Hex Head 1/4-20 x 3/4"	-
6	15-00102	4	Lock Washer, Helical 1/4"	-
7	15-00121	4	Flat Washer, 1/4" SAE	-
8	21-40588	1	Male Elbow 90^0, Steel 1/2 NPT x 1/2 -37T	-
9	27-78701	1	Tube Assembly	-
10	21-78701	1	Male Branch Tee, Steel 3/8 NPT x 1/2 -37T	-
11	21-51045	1	Male Comp. Fitting, Brass 1/4" Tube x 1/4 HB	-
12	41-01011	14"	Hose 1/4" ID Push-on	-
13	21-80002	1	Female Swivel Steel 1/4 HB x 1/4 -37T Push-on	-
14	21-71053	1	Male Elbow 90^0 Steel 1/8 NPT x 1/4 -37T	-
15	00-40016	1	Strain Relief Connection 1/2 NPT	-

Oil Drain Kit

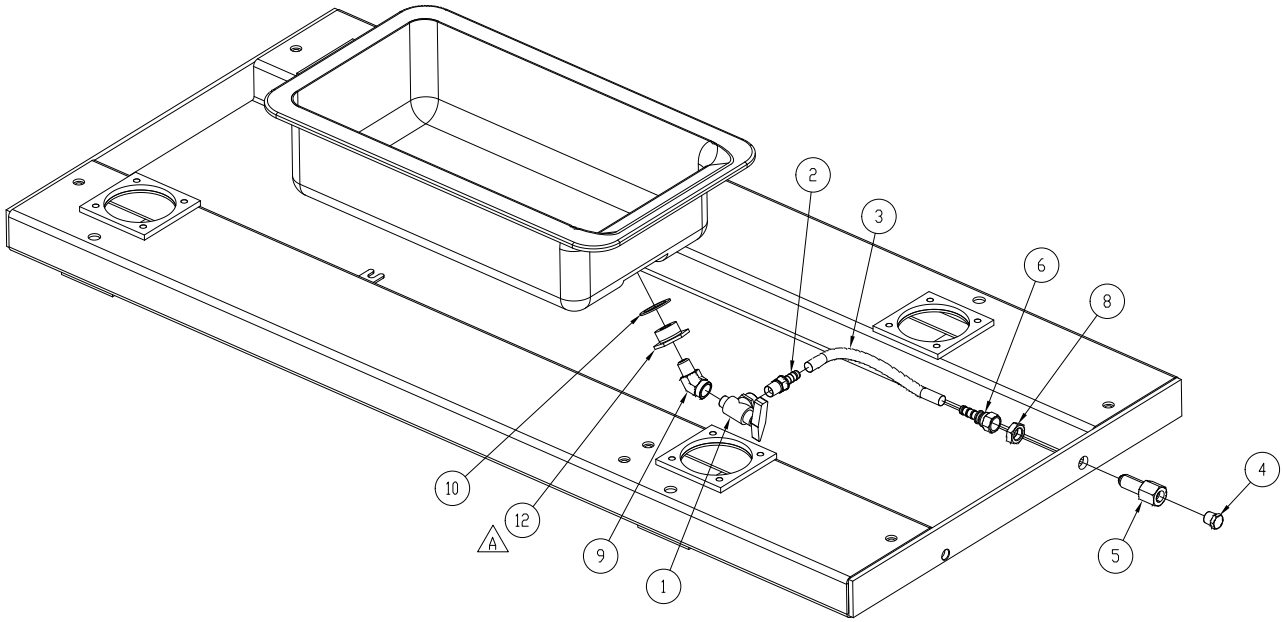

B-11440

KEY	PART NUMBER	QTY	DESCRIPTION	SERIAL NUMBER
1	36-72012	1	Ball valve, Brass 90° Flow	-
2	21-71203	1	Male connector, Brass 1/4 NPT x 3/8 HB Push-on	-
3	18-70008	1	Hose 3/8” ID x 8” Push-On	-
4	21-31624	1	Plug, HX HD Brass 1/4NPT	-
5	21-01012	1	Female bulkhead connector, Steel 1/4 NPT x 3/8-37T	-
6	21-71034	1	Female swivel, Brass 3/8HB x 3/8-37T Push-on	-
8	14-00010	1	Bulkhead nut 9/16-18	-
9	21-00034	1	Street elbow 45° Brass	-
10	90430-25001-71	1	Gasket M25, Oil Pan Drain	-
12	36-75403	1	Female adapter, Steel 1/4NPT x M25x1.5	-

Water Level Switch/Gauge

Tank Mounted

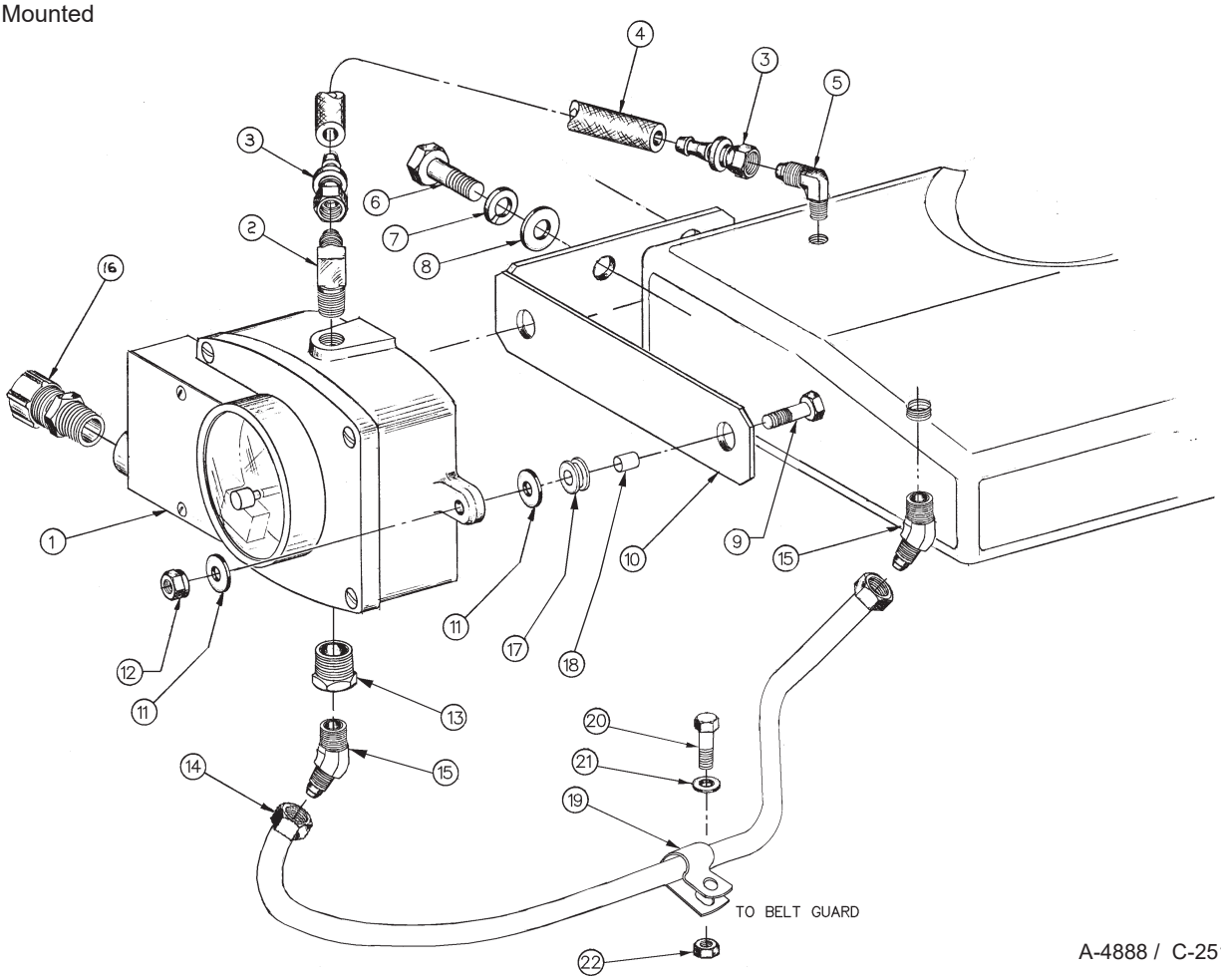

KEY	PART NUMBER	QTY	DESCRIPTION	SERIAL NUMBER
1	22-10003	1	Coolant Level Switch Gauge, Isolated Ground	-
2	21-71044	1	Male Elbow, 90° Brass 1/4 NPT x 1/4-45T	-
3	21-71045	2	Female Swivel, Brass 1/4-45T x 1/4 HB	-
4	18-51007	1	Hose, 1/4" ID x 8" Push-On	-
5	21-71043	1	Male Elbow, 90° Brass 1/8 NPT x 1/4-45T	-
6	12-00311	2	Capscrew, Hex Head 3/8 - 16 x 3/4"	-
7	15-00302	2	Lock Washer, Helical 3/8	-
8	15-00301	2	Flat Washer 3/8	-
9	12-00113	2	Capscrew, Hex Head 1/4 - 20 x 1 1/4"	-
10	23-75409	1	Bracket, Switch Gauge Mounting	-
11	15-70003	4	Snubbing Washer	-
12	14-00112	2	Nylock Hex Nut, 1/4 - 20	-
13	21-00135	1	Bushing, Brass 1/2 NPT x 1/4 NPT	-
14	18-15408	1	Hose Assembly 1/4" ID x 15"	-
15	21-05404	2	Male Elbow, 45° Steel 1/4 NPT x 1/4 - 37T	-
16	00-40016	1	Strain Relief Connection	-
17	00-41074	2	Grommet	-
18	21-15014	2	Sleeve	-
19	19-43201	1	Adelle Clamp	-
20	12-01131	1	Capscrew, Hex Head M6 x 1.0 x 20 mm	-
21	15-00008	1	Flat Washer M6	-
22	14-04803	1	Hex Nut, Nylock M6 x 1.0	-

4420 14th Ave. NW., Seattle WA 98107
Tel: (206) 789-3880 • 1-800-762-0165 • Fax: (206) 782-5455
Northern Lights and Lugger are registered trademarks of Northern Lights, Inc.
© 2022 All rights reserved. Litho USA.